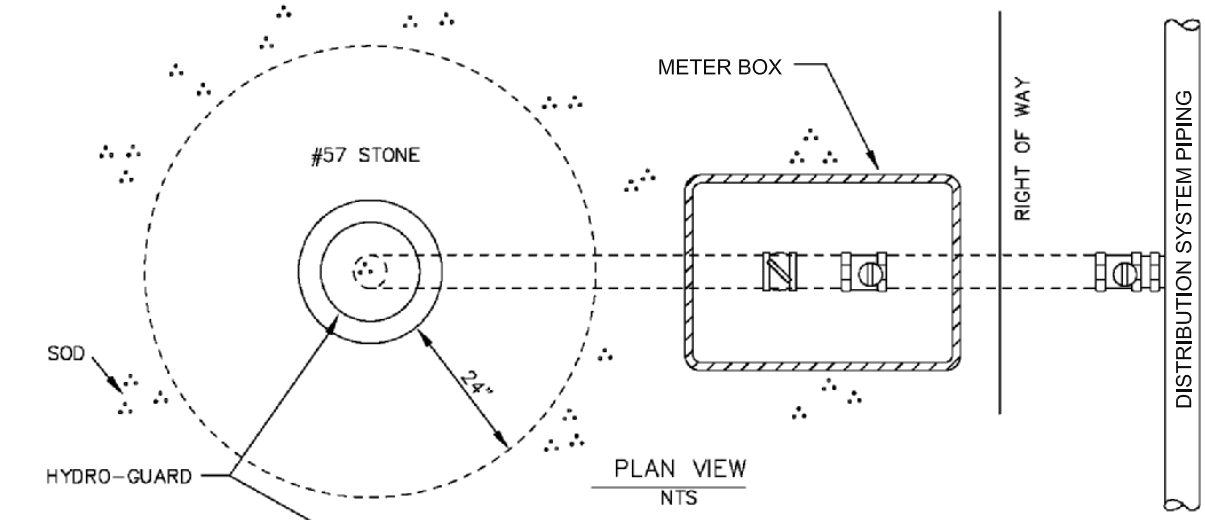

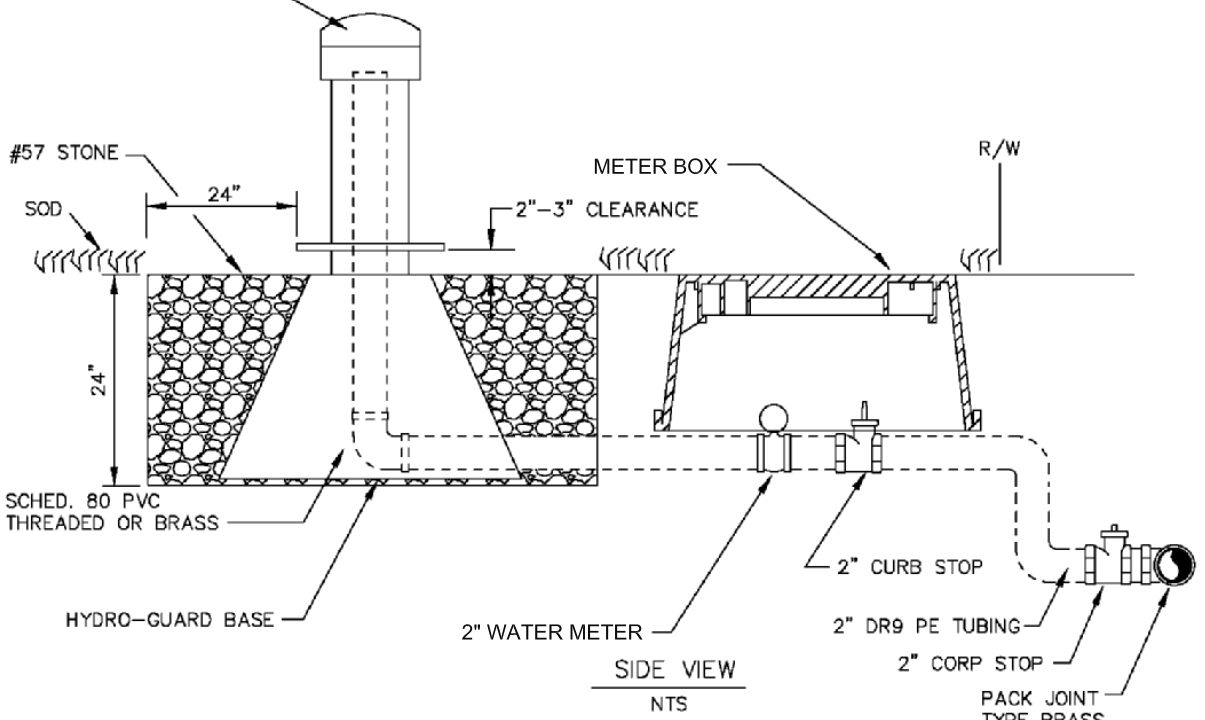

HYDRO-GUARD BY : ENVIRONMENTAL ENHANCEMENT & TECHNOLOGIES USA, INC.
P.O. BOX 110834
NAPLES, FLORIDA 34108

NOTE:
1. MAINTAIN A MINIMUM OF 3' CLEARANCE FREE OF ALL PLANTINGS & STRUCTURES AROUND HYDRO-GUARD DEVICE.
2. BOLLARDS SHALL BE REQUIRED ON A CASE-BY-CASE BASIS HYDRO-GUARD DEVICE.
3. AUTOMATIC FLUSHING DEVICE SHALL BE INSTALLED ON ALL "DEAD END" LINES, CONSTRUCTION LINES, PHASE LINES AND CUL-DE-SAC LOOPS.
4. HYDROGUARD DEVICE SHALL BE SET BEHIND RIGHT OF WAY LINE AND ON PROPERTY LINE.
5. SODDING MUST BE INSTALLED BEFORE HYDRO-GUARD IS ACTIVATED.

CITY OF ORMOND BEACH FLORIDA

STANDARD CONSTRUCTION DETAIL

HYDRO-GUARD
AUTOMATIC FLUSHING DEVICE

NTS

INDEX

W-14

DEC 2015