CONSTRUCTION PLANS
FOR
CITY OF ORMOND BEACH
ENVIRONMENTAL LEARNING CENTER
FEBRUARY 2015

City of Ormond Beach
Site Plan Review Committee
FINAL APPROVAL

ORMOND BEACH
SITE PLAN REVIEW COMMITTEE
FINAL APPROVAL
7.31.2015
Date

JUN 0 1 2015
MARK STEVEN DOWST
LICENSED
FLORIDA
PROFESSIONAL ENGINEER

VICINITY MAP SECTION 41 – T. 14 S. – R. 32 E.

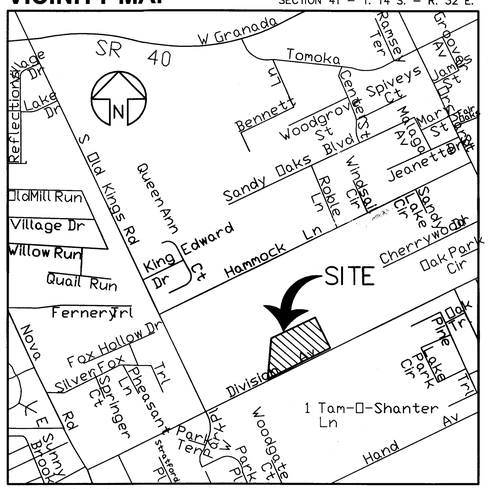

SOILS MAP

SCS SOIL TYPES: (47) PIT AND (69) TUSCAWILLA FINE SAND, HYDROLOGIC GROUP D

MAYOR

ED KELLEY

COMMISSIONERS

JAMES STOWERS, ZONE 1

RICK BOEHM, ZONE 3

TROY KENT, ZONE 2

BILL PARTINGTON, ZONE 4

CITY MANAGER

JOYCE SHANAHAN

PREPARED BY:

MARK DOWST & ASSOCIATES, INC.
ENGINEERS * PLANNERS * SURVEYORS

INDEX TO SHEETS

No.	DESCRIPTION
C1	COVER SHEET
C2	EXISTING SITE CONDITIONS
C3	DIMENSION PLAN
C4	PAVING AND GRADING PLAN
C5	UTILITY PLAN
C6–C7	CONSTRUCTION DETAILS
C8–C10	ORMOND BEACH CITY DETAILS
S1	PROPERTY SURVEYS
LA–1	CONCEPTUAL LANDSCAPE PLAN
LA–2	LANDSCAPE DETAILS

STATEMENT OF INTENT

CONSTRUCTION OF 1,980 S.F. ENVIRONMENTAL LEARNING CENTER WITH ASSOCIATED PARKING AND CANOE LAUNCHING FACILITIES.

EXISTING SITE CONDITION NOTES

1. SPECIFIC PURPOSE SURVEY PERFORMED BY MARK DOWST AND ASSOCIATES INC. PROJECT No. 1251, DATED 09-18-14.
2. ELEVATIONS REFER TO NAVD 1988, AND ARE IN FEET. CONVERSION FACTOR IS "NAVD 1988 PLUS 1.14 FEET EQUALS NGVD 1929 DATUM".
3. PARCEL FALLS IN FLOOD ZONE "X", (AREAS OUTSIDE THE 0.2% ANNUAL CHANCE FLOODPLAIN), FLOOD ZONE "X" (SHADED), (AREAS OF 0.2% ANNUAL CHANCE OF FLOOD) AND FLOOD ZONE "AE" (BASE FLOOD ELEVATION 7), AS SCALED FROM FLOOD INSURANCE RATE MAP No. 12127C0214 J, REVISED FEBRUARY 19, 2014.
4. EXISTING CONDITIONS HAVE BEEN SHOWN BASED UPON BEST AVAILABLE DATA. THE CONTRACTOR SHALL VERIFY EXISTING UTILITIES AND SITE CONDITIONS PRIOR TO CONSTRUCTION. ANY DISCREPANCIES IN EXISTING UTILITIES OR SITE CONDITIONS SHALL BE BROUGHT TO THE ATTENTION OF THE ENGINEER PRIOR TO CONSTRUCTION. RELOCATION OF EXISTING UTILITIES SHALL BE COORDINATED WITH THE OWNER OF THE UTILITY, AND RELOCATED AT THE EXPENSE OF THE CONTRACTOR. THE CONTRACTOR SHALL COOPERATE WITH THE RESPECTIVE UTILITY COMPANIES WHEN RELOCATING THEIR UTILITIES.
5. WETLAND LINES ARE SHOWN BASED ON WETLAND LINE FLAGGED BY ENVIRONMENTAL SERVICES, INC. AND CONFIRMED BY S.J.R.W.M.D.

FINAL APPROVAL — City of Ormond Beach Review Committee

GRAPHIC SCALE

0 15 30 60 90

SCALE: 1" = 30'

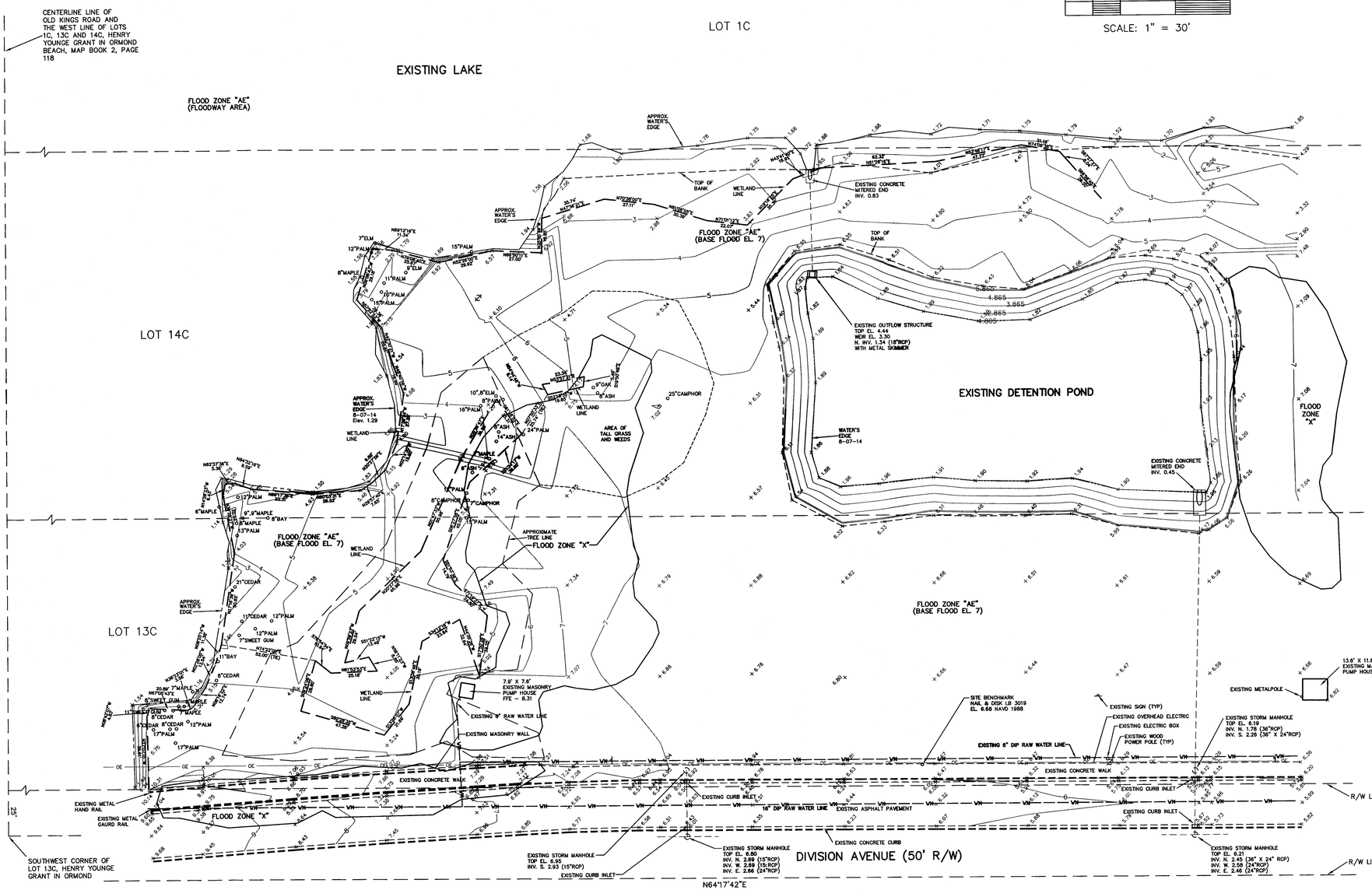

NO.	DATE	APPR.	REVISION
1	5-22-15	MSD	REVISED PER CITY COMMENTS

JUN 01 2015

STATE OF FLORIDA — MARK STEVEN DOWST — LICENSE NO. 39550 — PROFESSIONAL ENGINEER

MARK DOWST & ASSOCIATES, INC.
ENGINEERS * PLANNERS * SURVEYORS
EB 4335 LB 4335
536 N. HALIFAX AVENUE, SUITE # 100 • DAYTONA BEACH, FLORIDA 32118 • (386) 258-7999

SCALE	DESIGNED	DRAWN	CHECKED	DATE
1" = 30'	MSD	CSC	MSD	02-20-15
			BY	DATE

EXISTING SITE CONDITIONS

ENVIRONMENTAL LEARNING CENTER

ORMOND BEACH, FLORIDA

PROJECT NO. 1251 — C2

1251-SITE5

SECTION 41, TOWNSHIP 14 SOUTH, RANGE 32 EAST
ORMOND BEACH, VOLUSIA COUNTY, FLORIDA

GRAPHIC SCALE
0 15 30 60 90
SCALE: 1" = 30'

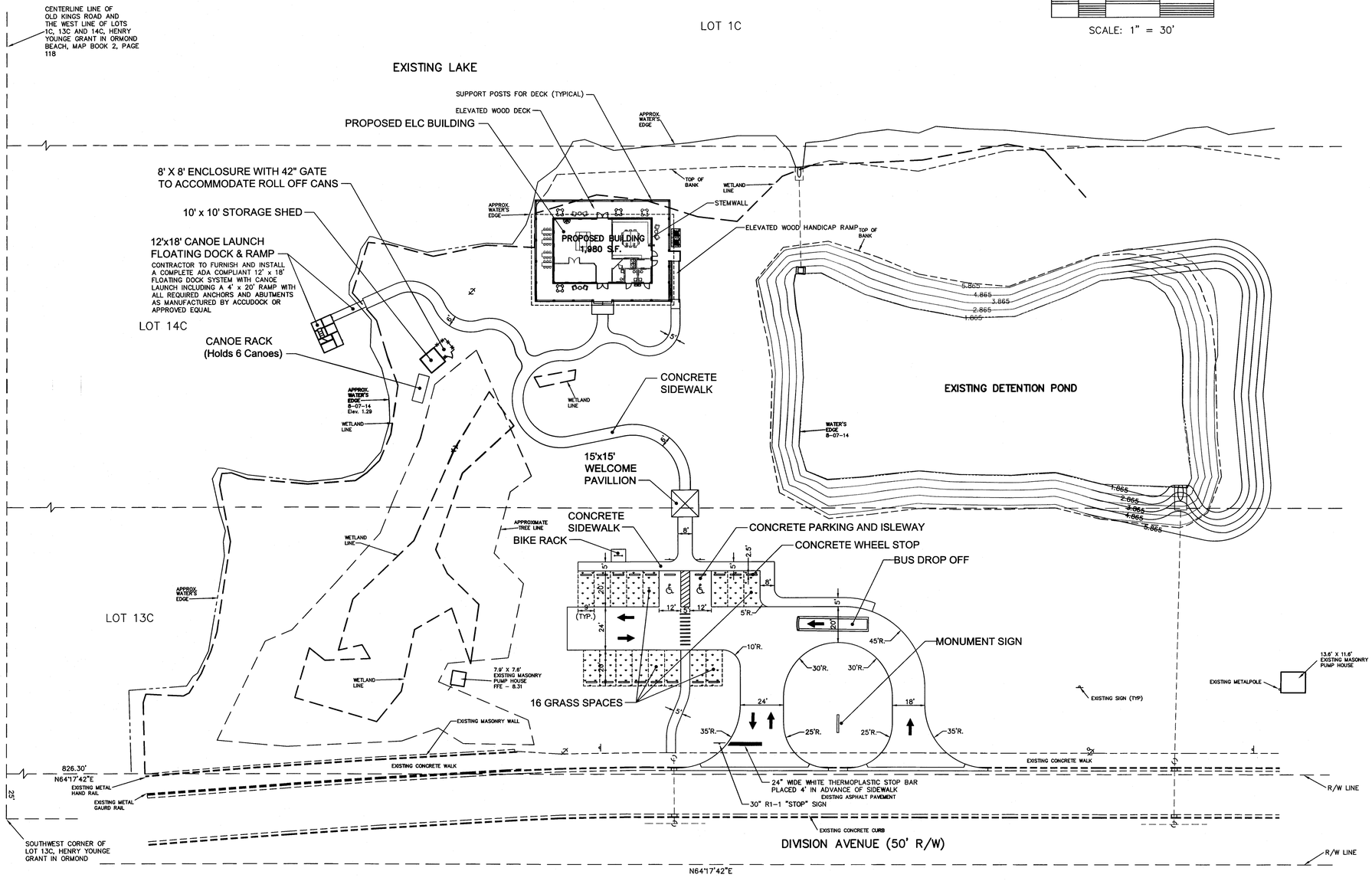

SITE DATA

EXISTING ZONING: SE (SPECIAL ENVIRONMENTAL)
PROPOSED USES: ENVIRONMENTAL LEARNING CENTER
TOTAL SITE AREA: PART OF CENTRAL PARK

DESCRIPTION	S.F.	ACRES
PROPOSED BUILDING:	1,980	0.045
PROPOSED CONCRETE:	16,974	0.390
TOTAL IMPERVIOUS AREA:	18,954	0.435

PARKING REQUIRED = 1,980 SF x 3.5 SP/ 1,000 SF = 7 SPACES
PARKING PROVIDED = 2 PAVED + 16 GRASS = 18 SPACES

BICYCLE PARKING PROVIDED = 5 SPACES

City of Ormond Beach — FINAL APPROVAL — Site Plan Review Committee

GENERAL NOTES

1. SCS SOIL TYPES:
   (47) PIT
   (69) TUSCAWILLA FINE SAND, HYDROLOGIC GROUP D
2. SPECIFIC PURPOSE SURVEY PERFORMED BY MARK DOWST AND ASSOCIATES, INC. PROJECT No. 1251, DATED 09-18-14.
3. ELEVATIONS REFER TO NAVD 1988, AND ARE IN FEET. CONVERSION FACTOR IS "NAVD 1988 PLUS 1.14 FEET EQUALS NGVD 1929 DATUM".
4. PARCEL FALLS IN FLOOD ZONE "X", (AREAS OUTSIDE THE 0.2% ANNUAL CHANCE FLOODPLAIN), FLOOD ZONE "X" (SHADED), (AREAS OF 0.2% ANNUAL CHANCE OF FLOOD) AND FLOOD ZONE "AE" (BASE FLOOD ELEVATION 7), AS SCALED FROM FLOOD INSURANCE RATE MAP No. 12127C0214 J, REVISED FEBRUARY 19, 2014.
5. EXISTING CONDITIONS HAVE BEEN SHOWN BASED UPON BEST AVAILABLE DATA. THE CONTRACTOR SHALL VERIFY EXISTING UTILITIES AND SITE CONDITIONS PRIOR TO CONSTRUCTION. ANY DISCREPANCIES IN EXISTING UTILITIES OR SITE CONDITIONS SHALL BE BROUGHT TO THE ATTENTION OF THE ENGINEER PRIOR TO CONSTRUCTION. RELOCATION OF EXISTING UTILITIES SHALL BE COORDINATED WITH THE OWNER OF THE UTILITY, AND RELOCATED AT THE EXPENSE OF THE CONTRACTOR. THE CONTRACTOR SHALL COOPERATE WITH THE RESPECTIVE UTILITY COMPANIES WHEN RELOCATING THEIR UTILITIES.
6. AREAS WITHIN THE PUBLIC RIGHT OF WAY OR OFF-SITE WHICH HAVE BEEN DISTURBED BY CONSTRUCTION ACTIVITY, SHALL BE CLEANED OF ALL DEBRIS, REGRADED TO THE PROPER ELEVATIONS, AND SODDED TO RESTORE THE AREA TO A STABILIZED AND PLANTED STATE.
7. SIGNS SHALL BE IN ACCORDANCE WITH THE CITY OF ORMOND BEACH REQUIREMENTS, AND PERMITTED SEPARATELY.
8. WATER AND SEWER CONNECTIONS SHALL BE IN ACCORDANCE WITH THE CITY OF ORMOND BEACH REQUIREMENTS.
9. REFER TO ARCHITECTURAL PLANS FOR DIMENSIONAL DATA AND CONSTRUCTION DETAILS NOT SHOWN.
10. CONCRETE PAVING SPECIFICATIONS:
    6" THICK CONCRETE (3000 PSI @ 28 DAYS WITH 6x6x1.4x1.4 WWF)
    6" COMPACTED CLEAN SAND SUBGRADE (MIN. 95% ASTM D-1557 COMPACTION) INSTALL CONTROL JOINTS PER PCA RECOMMENDATIONS.
11. ALL SITEWORK MATERIALS AND CONSTRUCTION METHODS SHALL BE IN ACCORDANCE WITH THE LATEST EDITION OF THE FLORIDA D.O.T. STANDARD SPECIFICATIONS AND SOUTHERN STANDARD BUILDING CODES.
12. ALL CONSTRUCTION SHALL BE IN ACCORDANCE WITH CITY OF ORMOND BEACH'S LAND DEVELOPMENT CODE.
13. ALL TRAFFIC CONTROL DEVICES, INCLUDING SIGNS AND PAVEMENT MARKINGS SHALL CONFORM TO THE "MANUAL ON UNIFORM TRAFFIC CONTROL DEVICES".
14. TAX PARCEL No.41-14-32-01-22-0110
15. ADDRESS: 601 DIVISION AVENUE
16. OWNER:
    CITY OF ORMOND BEACH
    22 S. BEACH STREET
    ORMOND BEACH, FLORIDA 32174

ENGINEER AND SURVEYOR:
MARK DOWST AND ASSOCIATES, INC.
536 N. HALIFAX AVENUE, SUITE 100
DAYTONA BEACH, FLORIDA 32118
PHONE: (386) 258-7999 FAX: (386) 257-4310

ARCHITECT:
BPF DESIGN INCORPORATED
207 FAIRVIEW AVENUE
DAYTONA BEACH, FLORIDA 32114
PHONE: (386) 257-0502 FAX: (386) 257-1050

BUILDING CONTRACTOR:
A.M. WEIGEL CONSTRUCTION, INC.
166 S. PALMETTO AVENUE
DAYTONA BEACH, FLORIDA 32114
PHONE: (386) 257-6691 FAX: (386) 257-6143

ENVIRONMENTAL CONSULTANT:
ENVIRONMENTAL SERVICES, INC.
124 N. NOVA ROAD, PMB 129
ORMOND BEACH, FLORIDA 32174
PHONE: (386) 566-2733 FAX: (386) 633-5688

GEOTECHNICAL ENGINEER:
UNIVERSAL ENGINEERING SCIENCES
911 BEVILLE ROAD, SUITE 3
SOUTH DAYTONA, FLORIDA 32119
PHONE: (386) 756-1105

17. THE EXISTING LAKE IS PUMP MAINTAINED AT EL. 1.86' NAVD 88 (3.00' NGVD 29)

NO.	DATE	APPR.	REVISION
3	5-22-15	MSD	REVISED PER CITY COMMENTS
2	04-16-15	MSD	REVISED PER SJRWMD COMMENTS
1	03-25-15	MSD	GENERAL REVISION

JUN 01 2015

MARK STEVEN DOWST — No. 56403 — STATE OF FLORIDA — REGISTERED PROFESSIONAL ENGINEER

MARK DOWST & ASSOCIATES, INC.
ENGINEERS * PLANNERS * SURVEYORS
536 N. HALIFAX AVENUE, SUITE # 100 * DAYTONA BEACH, FLORIDA 32118 * (386) 258-7999
EB 4335 LB 4335

SCALE	DESIGNED	DRAWN	CHECKED	DATE
1" = 30'	MSD	CSC	MSD	02-20-15

BY DATE

DIMENSION PLAN
ENVIRONMENTAL LEARNING CENTER
ORMOND BEACH, FLORIDA

PROJECT NO. 1251 — C3

1251-SITE5

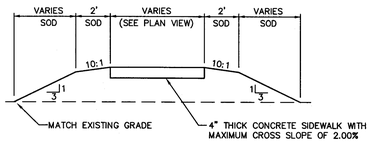

TYPICAL SIDEWALK SECTION

GRAPHIC SCALE

0 15 30 60 90

SCALE: 1" = 30'

LEGEND

- 24.44 — EXISTING GRADE
- 25.55 — PROPOSED GRADE
- 20.65 — INTERPOLATED EXISTING GRADE
- 24 — EXISTING CONTOUR
- 24 — PROPOSED CONTOUR
- PROPOSED STORMWATER RUNOFF
- PROPOSED TRAFFIC ARROW
- 12"P — EXISTING TREE TO REMAIN (SIZE AND TYPE INDICATED)
- 12"P — EXISTING TREE TO BE REMOVED (SIZE AND TYPE INDICATED)

City of Ormond Beach — FINAL APPROVAL — Site Plan Review Committee

PAVING AND DRAINAGE NOTES

1. THE CONTRACTOR SHALL TAKE ALL NECESSARY STEPS TO PREVENT TURBIDITY/SILTRATION FROM LEAVING SITE DURING SITEWORK CONSTRUCTION BY UTILIZING HAY BALES, SILT FENCES, AND SILTATION BASINS WHERE APPROPRIATE. PARTIALLY EXCAVATED RETENTION BASINS SHALL BE USED TO CONTROL SITE RUNOFF DURING CONSTRUCTION.
2. ALL STORM DRAIN PIPE 15" AND LARGER SHALL BE RCP CLASS III.
3. CONCRETE CURBS SHALL HAVE A MINIMUM 28 DAY COMPRESSION STRENGTH OF 3000 PSI. CURBS SHALL BE SAW CUT AT 10 FOOT INTERVALS WITH EXPANSION JOINTS AT 60 FOOT INTERVALS.
4. ALL SITE WORK MATERIALS AND CONSTRUCTION METHODS SHALL BE IN ACCORDANCE WITH PROJECT SPECIFICATIONS, THE LATEST EDITION OF THE FLORIDA DOT STANDARD SPECIFICATIONS AND SOUTHERN STANDARD BUILDING CODES.
5. ALL UNDERGROUND UTILITIES MUST BE INSTALLED, TESTED, AND APPROVED FOR ACCEPTANCE BY THE UTILITY PRIOR TO PREPARATION AND COMPLETION OF SUBGRADE FOR ROADWAYS AND PAVING AREAS.
6. FOR BUILDING FOUNDATION SITE PREPARATION REQUIREMENTS, SEE GEOTECHNICAL REPORT AND ARCHITECTURAL SPECIFICATIONS BY OTHERS.
7. ALL SURFACES OF PARKING LOT SHALL BE GRADED TO PROVIDE A MINIMUM OF 1.00% SURFACE SLOPE TO PREVENT PONDING.
8. ELEVATIONS REFER TO NAVD 1988, AND ARE IN FEET. CONVERSION FACTOR IS "NAVD 1988 PLUS 1.14 FEET EQUALS NGVD 1929 DATUM".

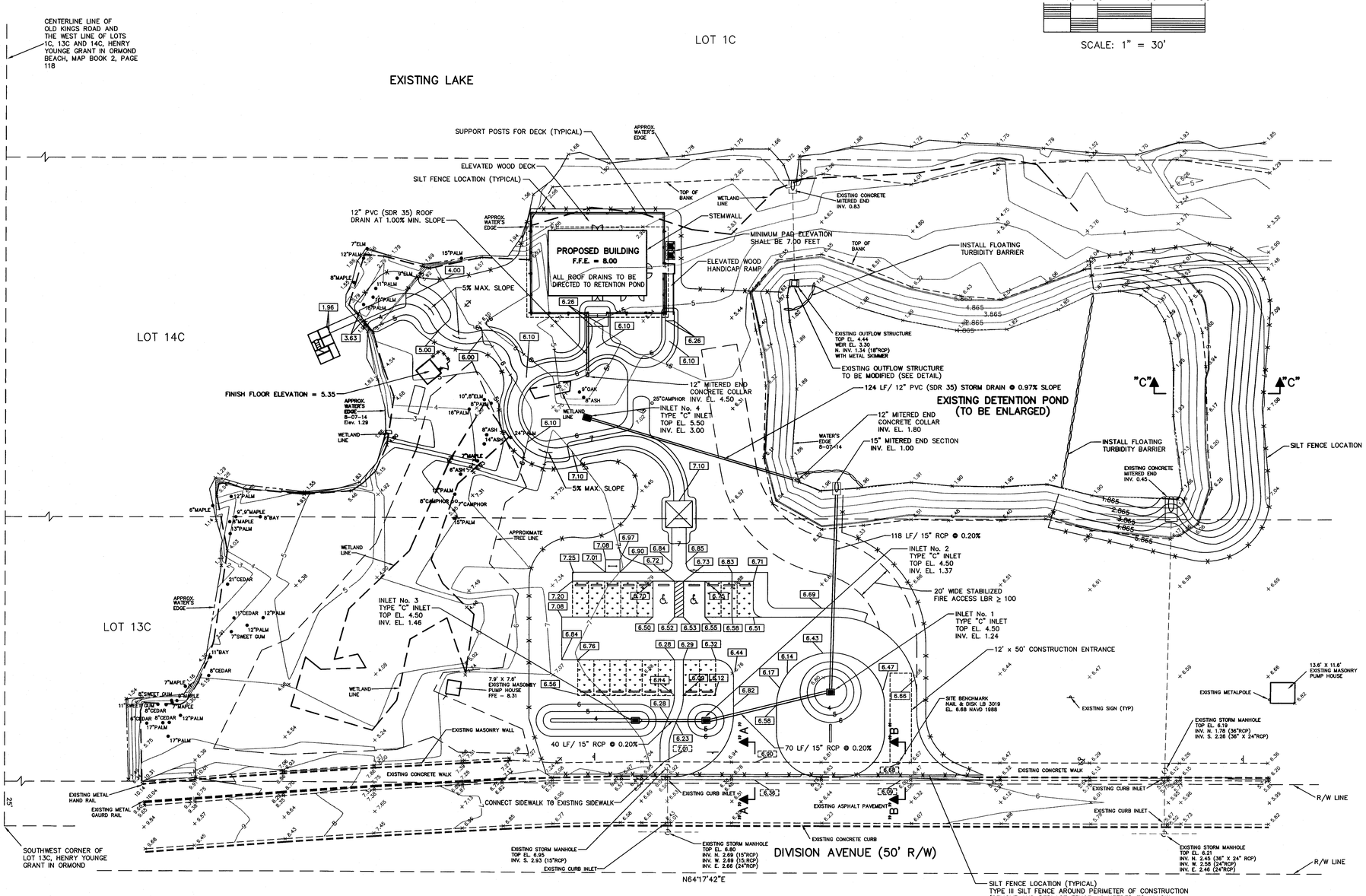

NO.	DATE	APPR.	REVISIONS
4	05-28-15	MSD	REVISED PER CITY COMMENTS
3	5-22-15	MSD	REVISED PER CITY COMMENTS
2	04-16-15	MSD	REVISED PER SJRWMD COMMENTS
1	03-25-15	MSD	GENERAL REVISION

JUN 01 2015 — STEVEN DORST — LICENSE — 66503 — STATE OF FLORIDA — PROFESSIONAL ENGINEER

MARK DOWST & ASSOCIATES, INC.
ENGINEERS * PLANNERS * SURVEYORS
EB 4335 LB 4335
536 N. HALIFAX AVENUE, SUITE #100 * DAYTONA BEACH, FLORIDA 32118 * (386) 258-7999

SCALE	DESIGNED	DRAWN	CHECKED	DATE
1" = 30'	MSD	CSC	MSD	02-20-15

PAVING AND GRADING PLAN
ENVIRONMENTAL LEARNING CENTER
ORMOND BEACH, FLORIDA

PROJECT NO. 1251 — C4

1251-SITE6

GRAPHIC SCALE

0 15 30 60 90

SCALE: 1" = 30'

STEP SYSTEM NOTES:

CONTRACTOR SHALL INSTALL A COMPLETE POLYLOK PL-STEP 49 DUPLEX STEP SYSTEM CONSISTING OF THE FOLLOWING:

1. 1530 GALLON FIBERGLASS TANK (INFILTRATOR IM-1530P/2) WITH RISERS TO GRADE OR APPROVED EQUAL
2. SJE RHOMBUS MODEL 112 CONTROL PANEL (112-1-W-1-1-4-H-17A) OR APPROVED EQUAL
3. POLYLOK PL-TE20 SEPTIC TANK EFFLUENT PUMP (3450 RPM, 1/2 HP, 115 V.) AS MANUFACTURED BY POLYLOK OR APPROVED EQUAL. PUMPS SHALL BE RATED FOR 20 GPM AT 90' TDH.

SUPPLIER CONTACT INFORMATION:
204 GORMON DAYTONA
PHONE: (386) 253-3633

UTILITY NOTES:

1. METALIZED LOCATION TAPE SHALL BE PLACED OVER THE WATER SERVICE, FORCE MAIN AND 2" CONDUITS.
2. (3) 2" CONDUITS ARE TO MAINTAIN 24" MINIMUM COVER AS THEY PASS UNDER STORMWATER RETENTION AREA.
3. FORCE MAIN AND WATER SERVICE SHALL MAINTAIN 30" MINIMUM COVER AS IT PASSES UNDER THE STORMWATER RETENTION AREA.

City of Ormond Beach FINAL APPROVAL

EXISTING LAKE

APPROX. WATER'S EDGE

TOP OF BANK

WETLAND LINE

APPROX. WATER'S EDGE

PROPOSED BUILDING

TOP OF BANK

5.865
4.865
3.865
2.865
1.865

6" PVC SANITARY SEWER SERVICE AT 1.00% MIN. (C-900, DR-25, CLASS 100 PVC)

EXISTING DETENTION POND

6' 10'

STEP SYSTEM

APPROX. WATER'S EDGE 8-07-14 Elev. 1.29

WETLAND LINE

WETLAND LINE

WATER'S EDGE 8-07-14

2" PVC FORCE MAIN (PVC 1120, SDR 21)

(3) 2" PVC CONDUITS (SCHEDULE 40)

1.865
2.865
3.865
4.865
5.865

APPROXIMATE TREE LINE

1" POTABLE WATER SERVICE (BLUE POLYETHYLENE TUBING, DR 9, 250 P.S.I.)

WETLAND LINE

APPROX. WATER'S EDGE

1" WATER METER WITH 1" REDUCED PRESSURE BACKFLOW PREVENTER

7.9' X 7.6' EXISTING MASONRY PUMP HOUSE FFE = 8.31

WETLAND LINE

EXISTING 8" RAW WATER LINE

EXISTING MASONRY WALL

FIRE HYDRANT (TO BE INSTALLED BY OTHERS)

EXISTING SIGN (TYP)

EXISTING OVERHEAD ELECTRIC

EXISTING ELECTRIC BOX

EXISTING WOOD POWER POLE (TYP)

EXISTING 6" DIP RAW WATER LINE

EXISTING METALPOLE

13.6' X 11.6' EXISTING MASONRY PUMP HOUSE

EXISTING CONCRETE WALK

EXISTING CONCRETE WALK

EXISTING METAL HAND RAIL

EXISTING METAL GAURD RAIL

16" DIP RAW WATER LINE

EXISTING ASPHALT PAVEMENT

EXISTING CONCRETE CURB

CONNECT TO 8" WATERMAIN (INSTALLED BY OTHERS)

DIVISION AVENUE (50' R/W)

8" WATER MAIN (BY OTHERS)

2" FORCE MAIN (BY OTHERS)

REMOVE PLUG AND CONNECT TO 2" FORCE MAIN (INSTALLED BY OTHERS) REPAIR SIDEWALK AS REQUIRED

NO.	DATE	APPR.	REVISION
4	05-28-15	MSD	REVISED PER CITY COMMENTS
3	5-22-15	MSD	REVISED PER CITY COMMENTS
2	04-16-15	MSD	REVISED PER CITY COMMENTS
1	03-25-15	MSD	GENERAL REVISION

JUN 01 2015

MARK STEVEN DOWST LICENSED PROFESSIONAL ENGINEER STATE OF FLORIDA

MARK DOWST & ASSOCIATES, INC.
ENGINEERS * PLANNERS * SURVEYORS
EB 4335 LB 4335
536 N. HALIFAX AVENUE, SUITE # 100 * DAYTONA BEACH, FLORIDA 32118 * (386) 258-7999

SCALE	DESIGNED	DRAWN	CHECKED
1" = 30'	MSD	CSC	MSD
	DATE 02-20-15		DATE
			BY

UTILITY PLAN

ENVIRONMENTAL LEARNING CENTER

ORMOND BEACH, FLORIDA

PROJECT NO. 1251 C5

1251-SITE6

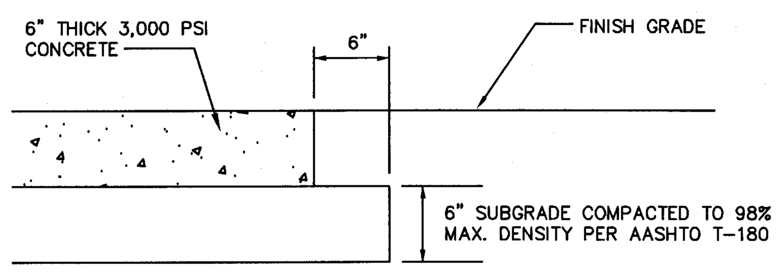

CONCRETE PAVEMENT SPECIFICATION: ALL PAVED AREAS SHALL BE 6" 3,000 PSI CONCRETE OVER 6" SUBGRADE COMPACTED TO 98% MAXIMUM DENSITY PER AASHTO T-180. ALL CONCRETE CONSTRUCTION SHALL BE IN ACCORDANCE WITH SECTIONS 345 AND 350 OF THE FLORIDA DEPARTMENT OF TRANSPORTATION STANDARD SPECIFICATIONS FOR ROAD AND BRIDGE CONSTRUCTON 1991 EDITION.

CONCRETE PAVEMENT DETAIL

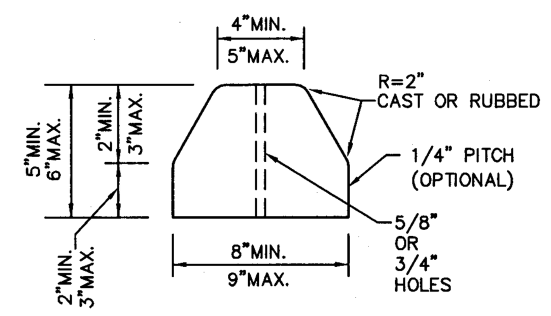

SECTION

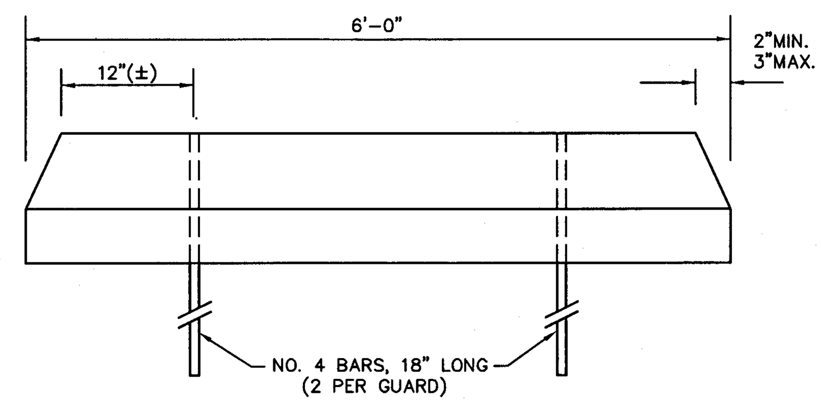

ELEVATION

CONCRETE WHEEL STOP DETAIL

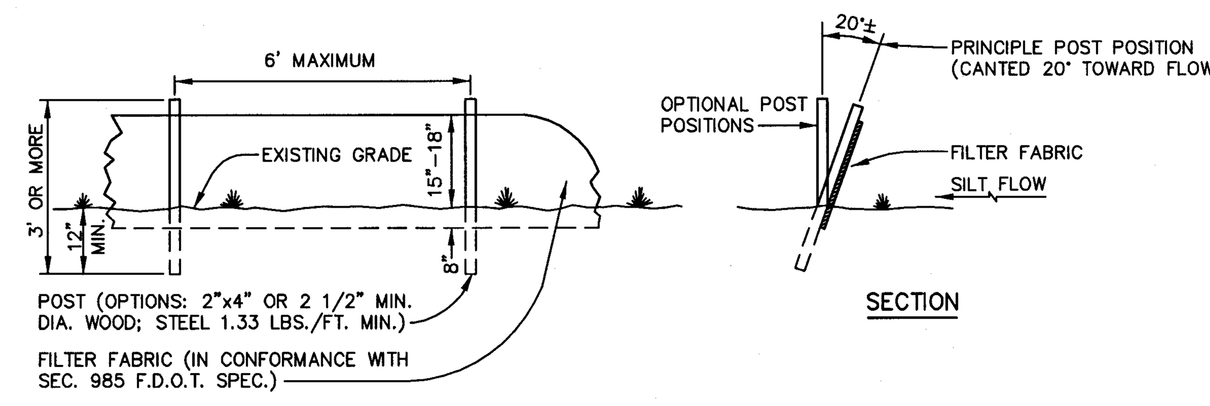

SILT FENCE DETAIL

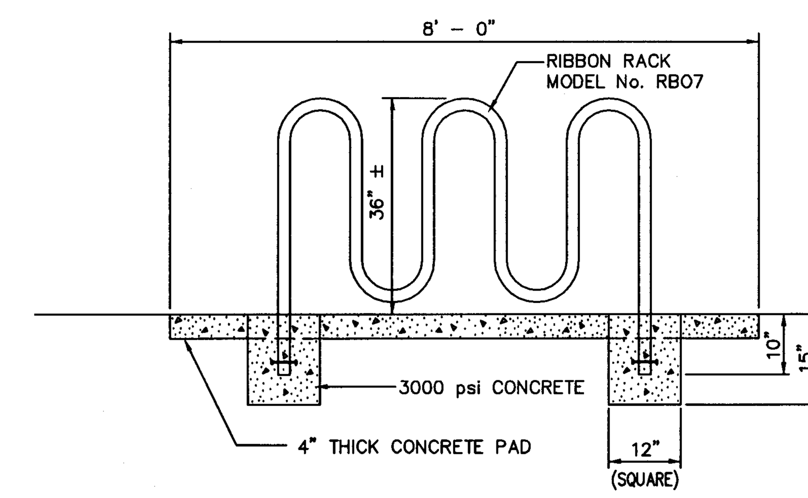

BICYCLE RACK DETAIL

OPERATION AND MAINTENANCE PROCEDURES

1. RETENTION AREA SIDESLOPES TO BE INSPECTED PERIODICALLY FOR EROSION AND REGRADED AND SODDED AS REQUIRED.
2. OUTFLOW STRUCTURE SHALL BE INSPECTED MONTHLY AND CLEANED OF ALL DEBRIS TO INSURE PROPER PERFORMANCE.
3. STORM DRAIN INLET GRATES SHALL BE CLEANED OF DEBRIS AS REQUIRED TO PREVENT CLOGGING.

EROSION AND SEDIMENT CONTROL PLAN

1. CONTRACTOR SHALL MINIMIZE DISTURBANCE OF NATURAL VEGETATION TO THE MAXIMUM EXTENT PRACTICAL DURING CONSTRUCTION PROCESS.
2. SILT FENCE TO BE INSTALLED PRIOR TO CONSTRUCTION ON SITE. SILT FENCE TO BE INSPECTED WEEKLY AND CORRECTIVE ACTION TAKEN AS NECESSARY.
3. STORMWATER RETENTION AND DETENTION STORAGE MUST BE EXCAVATED TO ROUGH GRADE PRIOR TO BUILDING CONSTRUCTION OR PLACEMENT OF IMPERVIOUS SURFACE WITHIN THE AREA SERVED BY THOSE SYSTEMS. ADEQUATE MEASURES MUST BE TAKEN TO PREVENT SILTATION OF THESE TREATMENT SYSTEMS AND CONTROL STRUCTURES DURING CONSTRUCTION OR SILTATION MUST BE REMOVED PRIOR TO FINAL GRADING AND STABILIZATION.
4. DURING ANY CONSTRUCTION OF THE PERMITTED SYSTEM INCLUDING STABILIZATION AND REVEGETATION OF DISTURBED SURFACES, CONTRACTOR IS RESPONSIBLE FOR THE SELECTION, IMPLEMENTATION, AND OPERATION OF ALL EROSION AND SEDIMENT CONTROL MEASURES REQUIRED TO RETAIN SEDIMENT ONSITE AND PREVENT VIOLATIONS OF THE WATER QUALITY STANDARDS IN CHAPTERS 17-3 AND 17-4, F.A.C.
5. THE CONTRACTOR MUST CONSTRUCT AND MAINTAIN A PROTECTIVE COVER (VEGETATIVE OR SUITABLE ALTERNATIVE) FOR EROSION AND SEDIMENT CONTROL ON ALL LAND SURFACES EXPOSED OR DISTURBED BY CONSTRUCTION OF THE PERMITTED PROJECT. UNLESS MODIFIED BY ANOTHER CONDITION OF THIS PERMIT OR OTHERWISE SPECIFIED ON A DISTRICT-APPROVED EROSION AND SEDIMENT CONTROL PLAN, THE PROTECTIVE COVER MUST BE INSTALLED WITHIN FOURTEEN (14) DAYS AFTER FINAL GRADING OF THE AFFECTED LAND SURFACE. A PERMANENT VEGETATIVE COVER MUST BE ESTABLISHED WITHIN 60 DAYS OF ITS INSTALLATION. THE PERMITTEE'S REQUIREMENT TO MAINTAIN COVER ON OFFSITE SURFACES SHALL NOT BE COMPLETE UNTIL AFTER THE DISTRICT RECEIVES THE PERMITTEE'S STATEMENT OF COMPLIANCE.
6. AT A MINIMUM, SILT FENCES SHALL BE INSTALLED PER PLAN. ADDITIONAL MEASURES MUST BE TAKEN TO MINIMIZE IMPACTS TO RECEIVING WATERS SUCH AS THE USE OF ADDITIONAL SILT FENCING, AND SODDING.
7. THESE MEASURES ARE THE MINIMUM REQUIRED. ADDITIONAL CONTROLS SHALL BE UTILIZED AS REQUIRED.

DEWATERING NOTES

1. CONTRACTOR SHALL PERFORM DEWATERING ACTIVITIES IN STRICT ACCORDANCE WITH THE LATEST SJRWMD REQUIREMENTS, AND WITHIN MAXIMUM PUMPING RATE THRESHOLDS ALLOWED BY SJRWMD WITHOUT REQUIRING A CONSUMPTIVE USE PERMIT.
2. ALL WATER SHALL BE PUMPED TO TEMPORARY STILLING BASINS FOR SEDIMENTATION / TURBIDITY CONTROL. STILLING BASINS SHALL HAVE FILTER CLOTH IN PLACE ALONG DOWNSTREAM LIMITS PRIOR TO DEWATERING ACTIVITIES.
3. DEWATERING ACTIVITIES SHALL NOT EXCEED 100,000 GPD ON AN ANNUAL AVERAGE BASIS.

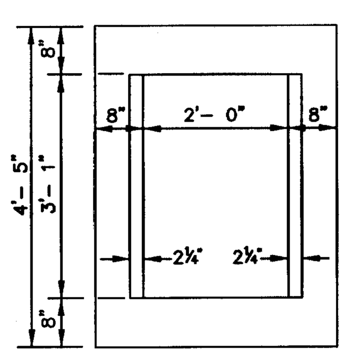

PLAN

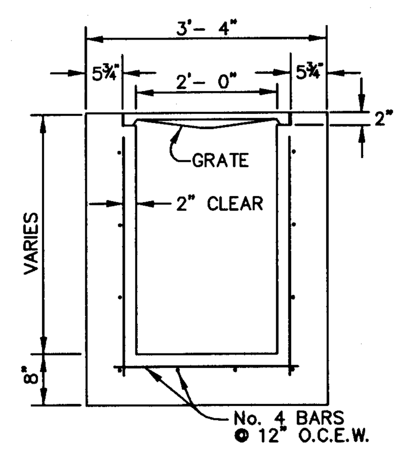

SECTION

RECOMMENDED MAXIMUM PIPE SIZE:
2'- 0" WALL – 18" PIPE
3'- 1" WALL – 24" PIPE

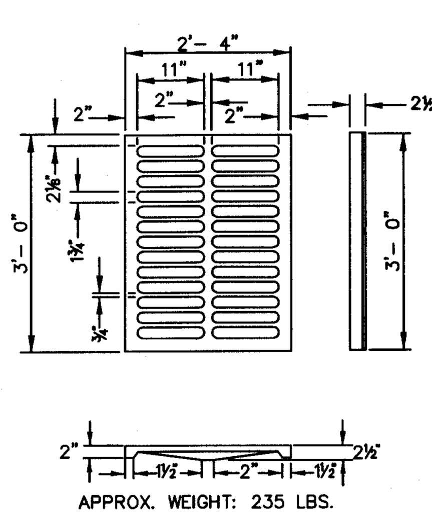

APPROX. WEIGHT: 235 LBS.

GRATE DETAIL

TYPE "C" INLET DETAIL

F.D.O.T. INDEX No. 232

D	A	B	C	E	F	G	M	N
15"	2.27'	4.09'	6.36'	4.03'	8'	1.22'	4.63'	1.19'
18"	2.36'	5.12'	7.48'	5.03'	9'	1.41'	4.92'	1.21'
24"	2.53'	7.18'	9.71'	7.03'	11'	1.73'	5.50'	1.25'
30"	2.70'	9.25'	11.95'	9.03'	13'	2.00'	6.08'	1.29'
36"	2.87'	11.31'	14.18'	11.03'	15'	2.24'	6.67'	1.33'
42"	3.05'	13.37'	16.42'	13.03'	17'	2.45'	7.25'	1.38'

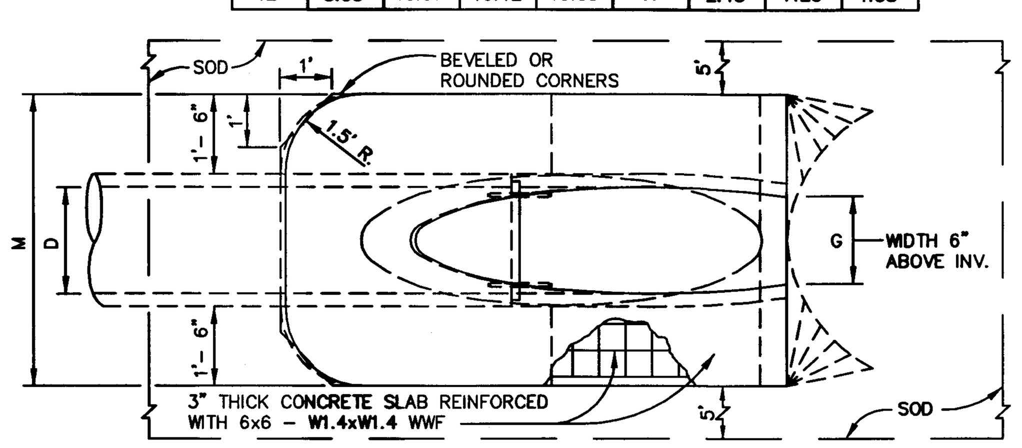

PLAN

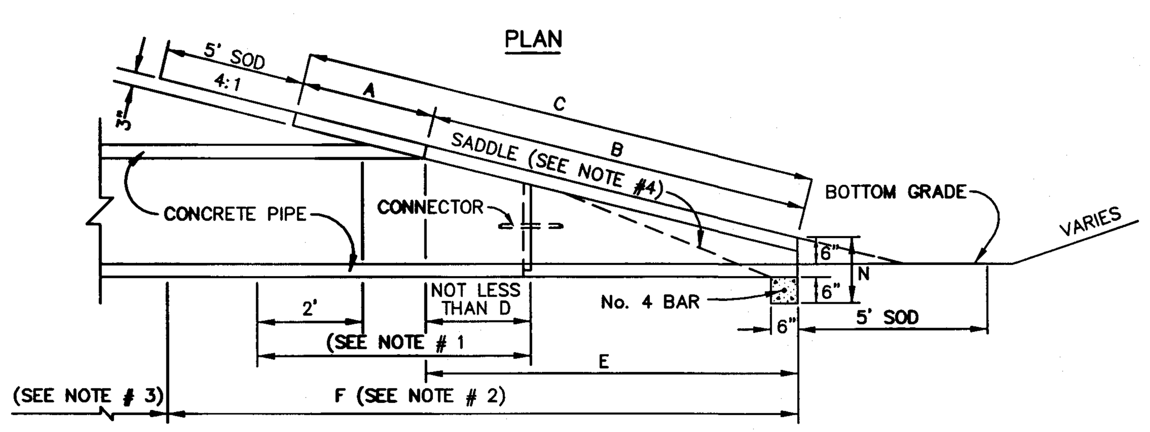

SECTION

NOTES:
1. NO PIPE JOINT PERMITTED UNLESS APPROVED BY THE ENGINEER.
2. PIPE TO BE INCLUDED UNDER UNIT PRICE FOR MITERED END SECTION.
3. PAID FOR AS CROSS DRAIN PIPE CULVERT.
4. SLOPE 4:1 MITER TO ℄ PIPE FOR PIPES 18" AND SMALLER, 2:1 FOR PIPES 24" AND LARGER.

MITERED END SECTION DETAIL

F.D.O.T. INDEX No. 272

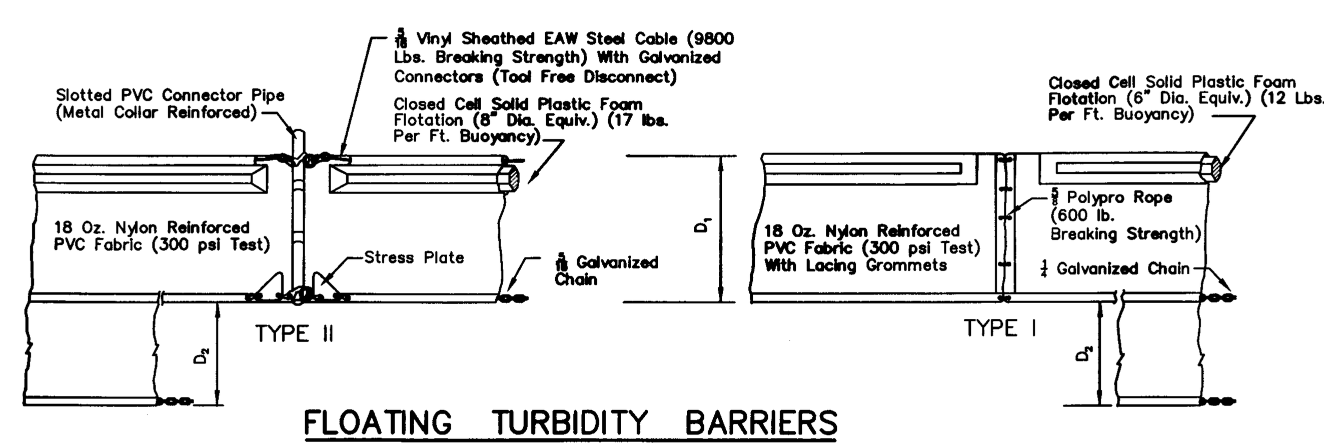

FLOATING TURBIDITY BARRIERS

NOTICE:
COMPONENTS OF TYPES I & TYPE II MAY BE SIMILAR OR IDENTICAL TO PROPRIETARY DESIGNS. ANY INFRINGEMENT ON THE PROPRIETARY RIGHTS OF THE DESIGNER SHALL BE THE SOLE RESPONSIBILITY OF THE USER. SUBSTITUTIONS FOR TYPES I AND II SHALL BE AS APPROVED BY THE ENGINEER.

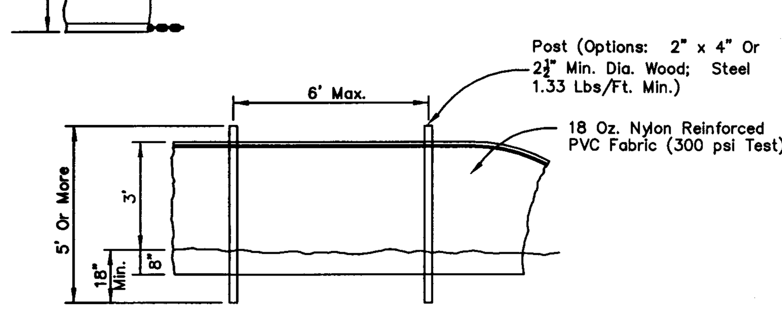

STAKED TURBIDITY BARRIER

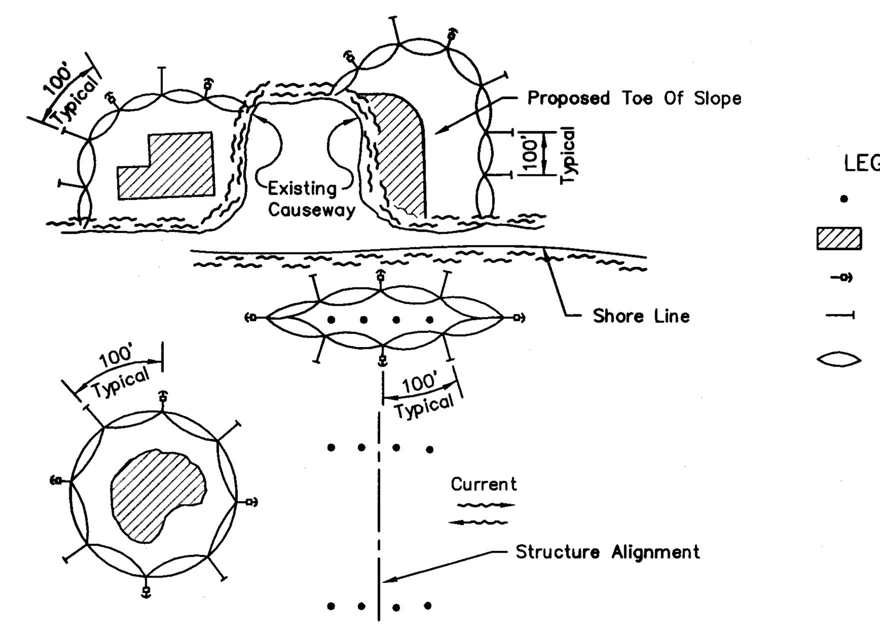

LEGEND
- Pile Locations
- Dredge Or Fill Area
- Mooring Buoy w/Anchor
- Anchor
- Barrier Movement Due To Current Action

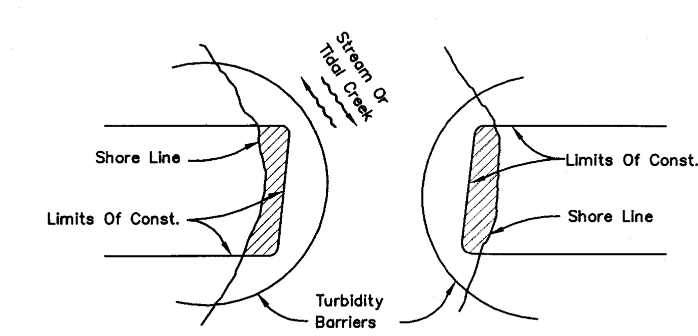

NOTES:
1. Turbidity barriers are to be used in all permanent bodies of water regardless of water depth.
2. Number and spacing of anchors dependent on current velocities.
3. Deployment of barrier around pile locations may vary to accommodate construction operations.
4. Navigation may require segmenting barrier during construction operations.
5. For additional information see Section 104 of the FDOT Standard Specifications.

Note:
Turbidity barriers for flowing streams and tidal creeks may be either floating, or staked types or any combinations of types that will suit site conditions and meet erosion control and water quality requirements. The barrier type(s) will be at the Contractors option unless otherwise specified in the plans, however payment will be under the contract lump sum price established in the bid proposal for Erosion & Sediment Control Posts in staked turbidity barriers to be installed in vertical position unless otherwise directed by the Engineer.

TURBIDITY BARRIER APPLICATIONS

TURBIDITY BARRIERS

(D-907) N.T.S.

City of Ormond Beach FINAL APPROVAL Site Plan Review Committee

REVISION | NO. | DATE | APPR.

JUN 01 2015

MARK STEVEN DOWST LICENSE No. 55503 STATE OF FLORIDA PROFESSIONAL ENGINEER

MARK DOWST & ASSOCIATES, INC.
ENGINEERS * PLANNERS * SURVEYORS
EB 4335 LB 4335
536 N. HALIFAX AVENUE, SUITE # 100 * DAYTONA BEACH, FLORIDA 32118 * (386) 258-7999

SCALE N.T.S. | DESIGNED MSD | DRAWN JAY | CHECKED MSD | DATE 02-20-15
BY | DATE

CONSTRUCTION DETAILS
ENVIRONMENTAL LEARNING CENTER
ORMOND BEACH, FLORIDA

PROJECT NO. 1251 | C6
1251DET2

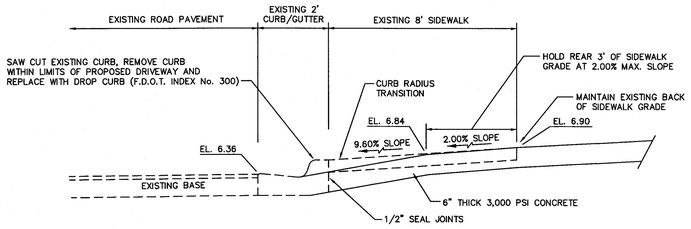

SECTION "A"–"A"

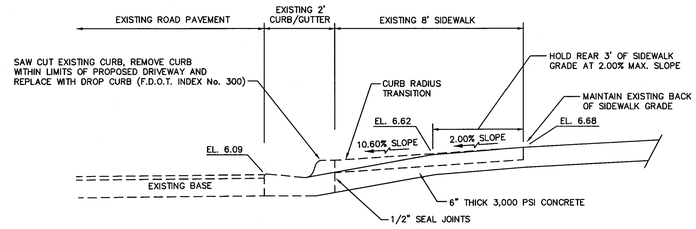

SECTION "B"–"B"

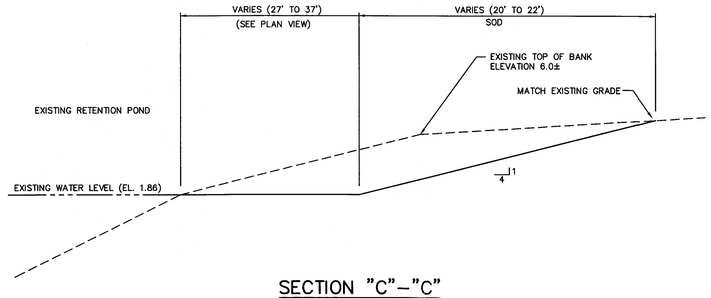

SECTION "C"–"C"

CANOE RACK DETAIL

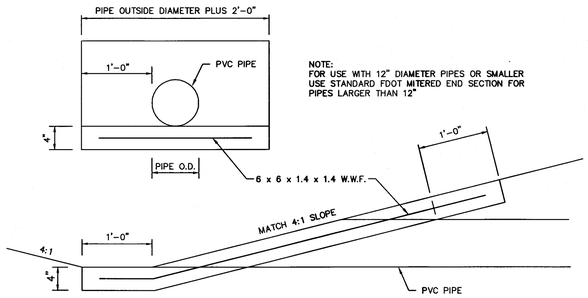

MITERED END CONCRETE COLLAR DETAIL

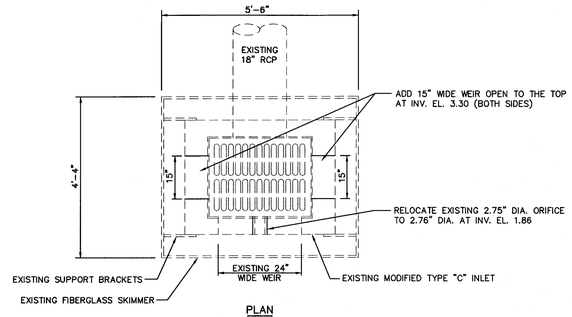

EXISTING OUTFLOW STRUCTURE MODIFICATION DETAIL

City of Ormond Beach
FINAL APPROVAL
Site Plan Review Committee

NO.	DATE	APPR.	REVISION
2	04-16-15	MSD	REVISED PER SJRWMD COMMENTS
1	03-25-15	MSD	GENERAL REVISION

JUN - 1 2015

MARK STEVEN DOWST STATE OF FLORIDA No. 65503 PROFESSIONAL ENGINEER

MARK DOWST & ASSOCIATES, INC.
ENGINEERS * PLANNERS * SURVEYORS
EB 4335 LB 4335
536 N. HALIFAX AVENUE, SUITE #100 * DAYTONA BEACH, FLORIDA 32118 * (386) 258-7999

SCALE	DESIGNED	DRAWN	CHECKED	DATE
N.T.S.	MSD	JAY	MSD	02-20-15

BY DATE

CONSTRUCTION DETAILS
ENVIRONMENTAL LEARNING CENTER
ORMOND BEACH, FLORIDA

PROJECT NO. 1251 C7

1251DET2

ROADWAY CONSTRUCTION NOTES

1. ALL RIGHT OF WAY OTHER THAN ROADWAY AREAS SHALL BE SEEDED AND MULCHED OR SODDED. ALL SLOPES GREATER THAN 6% SHALL BE SODDED. THE CITY RESERVES THE RIGHT TO REQUIRE SODDING IN SPECIAL AREAS WHERE EROSION IS A CONCERN.
2. THE FOLLOWING WILL BE THE STANDARD PROTECTION FOR DITCHES UNLESS DRAINAGE CALCULATIONS INDICATE OTHERWISE:

SWALE PROFILE GRADES	PROTECTION REQUIRED
0.2% – 1.0%	SEEDING AND MULCHING
1.0% – 4.0%	SODDING
4.0% AND GREATER	DITCH PAVING

3. ALL FRANCHISE UTILITY CROSSINGS, INCLUDING BUT NOT LIMITED TO FPL, BELLSOUTH AND CABLE SHALL BE INSTALLED PRIOR TO INSTALLATION AND COMPACTION OF THE ROAD SUB BASE. ANY CROSSINGS AFTER INSTALLATION OF THE SUB BASE SHALL BE BY DIRECTIONAL BORE.
4. THE LIMITS OF STABILIZED SUB BASE SHALL EXTEND TO A DEPTH OF SIX INCHES (6") BELOW THE BOTTOM OF THE BASE AND OUTWARD TO TWELVE INCHES (12") BEYOND THE CURB. •
5. THE STABILIZING MATERIAL, IF REQUIRED, SHOULD BE A HIGH BEARING VALUE SOIL, SAND-CLAY, LIMEROCK, RECYCLED CONCRETE, SHELL OR OTHER MATERIAL AS APPROVED BY THE CITY AND A LICENSED SOILS ENGINEER.
6. THE SUB BASE SHALL BE STABILIZED NOT LESS THAN FORTY (40) POUNDS LIMEROCK BEARING RATIO (LBR). A COMPACTION OF NO LESS THAN NINETY-EIGHT (98%) PERCENT DENSITY BASED ON AASHTO T-180 SHALL BE REQUIRED.
7. TESTS FOR SUB BASE BEARING CAPACITY AND COMPACTION SHALL BE DONE AT A MINIMUM OF EVERY 300 FEET AND SHALL BE STAGGERED TO THE LEFT, RIGHT AND AT CENTER LINE OF THE ROADWAY.
8. BASES FOR ALL STREETS SHALL HAVE A MINIMUM SIX INCH (6") DEPTH. PRIMING AND SANDING SHALL BE REQUIRED AS SOON AS BEARING CAPACITY AND COMPACTION HAS BEEN ACHIEVED.
9. MAXIMUM DENSITY BASED ON AASHTO T-180 MODIFIED PROCTOR TEST. RECYCLED CONCRETE OR LIMEROCK BASES SHALL BE COMPACTED TO (98%)
10. MATERIAL DELIVERY TICKETS SHALL BE PROVIDED TO THE CITY AT THE TIME OF PLACEMENT.
11. TESTING OF THE IN-PLACE BASE SHALL BE DONE AT INTERVALS EQUIVALENT TO SUB BASE TESTING AND SHALL CONSIST OF, AS A MINIMUM, MOISTURE CONTENT AND COMPACTION TEST.

STANDARD CONSTRUCTION DETAIL
ROADWAY CONSTRUCTION NOTES
INDEX R-1A
MARCH 2014

12. DESIGN MIXES SHALL BE SUBMITTED TO THE CITY FOR THEIR APPROVAL NO LESS THAN THREE (3) WORKING DAYS PRIOR TO ANY ROADWAY CONSTRUCTION.
13. ASPHALT SPECIFICATIONS SHALL BE SUBMITTED BY THE DESIGN ENGINEER WITH FINAL PLANS TO THE CITY. FLORIDA STATE CERTIFIED BATCH PLANTS MUST THEN CERTIFY THAT THESE APPROVED SPECIFICATIONS HAVE BEEN MET.
14. EXTRACTION AND GRADATION TESTS ON ASPHALT MIXES SHALL BE PROVIDED TO THE CITY TO INSURE THAT DESIGN MIXES MEET THE CITY STANDARD SPECIFICATIONS.
15. THE ROADWAY CROWN SHALL HAVE A STANDARD ONE QUARTER INCH (1/4") PER FOOT SLOPE.
16. ALL ROADWAYS WITH CURB AND GUTTER SECTIONS SHALL HAVE AS A STANDARD A MINIMUM LONGITUDINAL SLOPE OF 0.30%.
17. THE FINISHED PAVEMENT EDGE SHALL BE WITHIN ONE QUARTER INCH (1/4") OF THE ADJACENT CONCRETE CURB.
18. CONCRETE CURBS SHALL BE PROVIDED ON BOTH SIDES OF ALL STREETS AND CONSTRUCTED WITH 2500 PSI CONCRETE AT 28 DAYS.
19. CONCRETE CURBS SHALL BE SAW CUT TO A DEPTH EQUAL TO 1/4 OF CURB THICKNESS AT INTERVALS OF TEN FEET (10') WITH EXPANSION JOINTS AT STREET INTERSECTIONS, STRUCTURES AND ALONG CURVES AT SIXTY FEET (60') INTERVALS. ALL EXPANSION JOINT MATERIAL IS REQUIRED TO BE INSTALLED THROUGH THE ENTIRE DEPTH OF THE CONCRETE CURB.
20. AN "X" SHALL BE CUT IN THE CURB TO MARK THE LOCATION OF WATER DISTRIBUTION SYSTEM VALVE.
21. AN "↑" SHALL BE CUT INTO THE CURB TO MARK THE LOCATION OF ALL VALVES OTHER THAN WATER DISTRIBUTION VALVES.
22. A "V" SHALL BE CUT IN THE CURB TO MARK THE LOCATION OF ALL SEWER SERVICES.
23. A "⊥" SHALL BE CUT IN THE CURB TO MARK THE LOCATION OF ALL RECLAIMED WATER SERVICES.
24. A "Λ" SHALL BE CUT IN THE CURB TO MARK THE LOCATION OF ALL WATER SERVICES.

STANDARD CONSTRUCTION DETAIL
ROADWAY CONSTRUCTION NOTES
INDEX R-1B
MARCH 2014

25. THREE (3) CONCRETE CYLINDERS SHALL BE TAKEN AND TESTED FOR EVERY THREE HUNDRED (300) FEET OF ROADWAY CONSTRUCTED. TEST RESULTS SHALL THEN BE PROVIDED TO THE CITY AS THEY BECOME AVAILABLE.
26. THE DEVELOPER SHALL PROVIDE ALL REQUIRED PAVEMENT MARKINGS ON ALL ROADWAYS PER CITY, COUNTY AND STATE REQUIREMENTS. CENTERLINE STRIPES SHALL BE PROVIDED ON EXTENSIONS OF CITY COLLECTOR OR ARTERIAL ROADS, COUNTY ROADS AND STATE HIGHWAYS ONLY.
27. STOP BARS SHALL BE PLACED AT ALL SUBDIVISION ENTRANCES AND INTERSECTIONS CONTAINING CITY COLLECTOR AND ARTERIAL ROADS, COUNTY ROADS AND STATE HIGHWAYS.
28. ALL TRAFFIC CONTROL DEVICES PLACED AT INTERSECTIONS, PRIVATE STREETS, PUBLIC STREETS, COUNTY ROADS AND STATE HIGHWAYS WITHIN THE CITY LIMITS SHALL BE INSTALLED ACCORDING TO THE MANUAL ON UNIFORM TRAFFIC CONTROL DEVICES, LATEST EDITION.
29. THE DEVELOPER IS RESPONSIBLE FOR PAYING FEES FOR ALL STREET LIGHTS PRIOR TO ACCEPTANCE OF THE PROJECT BY THE CITY.
30. STANDARD TURNING RADII FOR INTERSECTIONS:

2-LANE ACCESS OR FEEDER	35'
LOCAL TO COLLECTOR	35'
LOCAL OR COLLECTOR TO ARTERIAL	40'
ARTERIAL TO ARTERIAL	50'

31. CITY INSPECTOR SHALL BE PRESENT DURING PAVING OF ALL PUBLIC AND PRIVATE ROADS. PAVING SHALL BE PERFORMED DURING NORMAL BUSINESS HOURS, MONDAY THROUGH FRIDAY. PAVING DURING WEEKENDS IS NOT PERMITTED.
32. CONSTRUCTION METHODS AND DESIGN FOR CONCRETE PAVEMENT SHALL CONFORM TO FDOT STANDARD SPECIFICATION FOR ROAD AND BRIDGE CONSTRUCTION, LATEST EDITION.
33. ALL CONTRACTORS THAT ARE PERFORMING THE CONSTRUCTION OF PUBLIC IMPROVEMENTS (WATER MAIN, SANITARY SEWER MAIN, RECLAIMED WATER MAIN, STORM WATER PIPES AND INLETS AND ALSO CONSTRUCTION OF ROADWAYS) SHALL BE CERTIFIED WITH THE FLORIDA STATE DEPARTMENT OF PROFESSIONAL REGULATIONS (DPR) FOR THE TYPE OF WORK THAT THEY PERFORM. A COPY OF THE VALID LICENSE IS REQUIRED AT PRE CONSTRUCTION MEETING.
34. UTILITY DEPTH:
    - HIGH VOLTAGE UTILITIES SUCH AS POWER (FEEDER, SERVICE AND DROPS) SHALL BE BURIED A MINIMUM OF 30 INCHES IN DEPTH.
    - LOW VOLTAGE UTILITIES SUCH AS PHONE AND CABLE TV SHALL BE BURIED A MINIMUM OF 12 INCHES IN DEPTH FOR FEEDER AND SERVICES. SERVICE DROPS SHALL BE BURIED A MINIMUM OF 6 INCHES IN DEPTH.
    - HIGH VOLTAGE UTILITIES INSTALLED PARALLEL TO PRESSURE MAINS SHALL MAINTAIN A MINIMUM FIVE FOOT SEPARATION.
35. GEOTECHNICAL TESTING REPORTS SIGNED AND SEALED BY A PROFESSIONAL ENGINEER SHALL BE SUBMITTED TO THE CITY OF ORMOND BEACH PRIOR TO FINAL SIGN OFF. REPORTS SHALL CLEARLY LABEL PROJECT NAME AND PHASE.

STANDARD CONSTRUCTION DETAIL
ROADWAY CONSTRUCTION NOTES
INDEX R-1C
MARCH 2014

ROADWAY COMPACTION AND DENSITY TESTING REQUIREMENTS

ITEM	TEST	FREQUENCY	STANDARD	TEST METHOD
ROADWAY SUBBASE (BOTTOM OF SUBBASE DOWN 1 FOOT)	IN-PLACE DENSITY	ONE (1) TEST/300 LF	95% MODIFIED PROCTOR (ASTM D-1557 OR AASHTO T-180)	ASTM D-2937 D-2922 D-1556
STABILIZED SUBBASE	IN-PLACE DENSITY	ONE (1) TEST/300 LF	95% MODIFIED PROCTOR (ASTM D-1557 OR AASHTO T-180)	ASTM D-2937 D-2922 D-1556
STABILIZED SUBBASE	FLORIDA BEARING VALUE (FBV)	ONE (1) TEST/300 LF	FBV = 75	
STABILIZED SUBBASE	LIMEROCK BEARING RATIO (LBR)	ONE (1) TEST/SOIL TYPE	LBR = 40	
LIMEROCK BASE	IN-PLACE DENSITY	ONE (1) TEST/300 LF	98% MODIFIED PROCTOR (ASTM D-1557 OR AASHTO T-180)	ASTM D-2937 D-2922 D-1556
LIMEROCK BASE	LIMEROCK BEARING RATIO (LBR)	PROVIDE CERTIFICATE FROM PLANT	LBR 100	FM 5-515
CRUSHED CONCRETE BASE	IN-PLACE DENSITY	ONE (1) TEST/300 LF	98% MODIFIED PROCTOR (ASTM D-1557 OR AASHTO T-180)	ASTM D-2937 D-1556
CRUSHED CONCRETE BASE	LIMEROCK BEARING RATIO (LBR)	(1) PER VISIBLE CHANGE IN MATERIAL BLEND	LBR 100	
ASPHALT	EXTRACTION AND GRADATION	(1) PER DAY PER MIX	PER MIX DESIGN	
ASPHALT	THICKNESS AND DENSITY	(1) PER 300 LF ROADWAY	PER MIX DESIGN AND JOB SPECS	D-2922 CORING OR NUCLEAR (DENSITY ONLY)
SOIL OPTIMUM MOISTURE/DENSITY	PROCTOR TEST	(1) PER SOIL OR BASE TYPE		ASTM D-1557 (MODIFIED) ASTM D-558 (STANDARD) AASHTO T-180 (MODIFIED) AASHTO T-99 (STANDARD)
CURB SUBBASE	IN-PLACE DENSITY	ONE (1) TEST/300 LF	98% MODIFIED PROCTOR (ASTM D-1557 OR AASHTO T-180)	
CURB SUBBASE (LBR)	LIMEROCK BEARING RATIO (LBR)	(1) TEST/SOIL CHANGE	LBR 40	

STANDARD CONSTRUCTION DETAIL
TECHNICAL SPECIFICATIONS FOR TESTING REQUIREMENTS
INDEX R-6A
MARCH 2014

PIPED UTILITY INSTALLATION REQUIREMENTS

ITEM	TEST	FREQUENCY	STANDARD	TEST METHOD
PIPE TRENCH SUBBASE (IF SPECIFIED)	IN-PLACE DENSITY	ONE (1) TEST/300 LF	98% MODIFIED PROCTOR	ASTM D-2937 D-2922 D-1556
PIPED BACKFILL IN PAVED AREAS	IN-PLACE DENSITY	ONE (1) TEST/300 LF PER ONE (1) FOOT VERTICAL LIFT OF FILL	98% MODIFIED PROCTOR	ASTM D-2937 D-2922 D-1556
PIPED BACKFILL IN GREEN AREAS	IN-PLACE DENSITY	ONE (1) TEST/300 LF PER ONE (1) FOOT VERTICAL LIFT OF FILL	90% MODIFIED PROCTOR	ASTM D-2937 D-2922 D-1556
SOIL OPTIMUM MOISTURE/DENSITY	PROCTOR TEST	ONE (1) PER SOIL OR BASE TYPE		ASTM D-2937 (MODIFIED) ASTM D-558 (STANDARD) AASHTO T-180 (MODIFIED) AASHTO T-99 (STD.)

STANDARD CONSTRUCTION DETAIL
TECHNICAL SPECIFICATIONS FOR TESTING REQUIREMENTS
INDEX R-6B
MARCH 2014

City of Ormond Beach
FINAL APPROVAL
Site Plan Review Committee

A. SCOPE OF WORK – THE WORK IN THIS SECTION CONSISTS OF FURNISHING AND COMPLETELY INSTALLING SEED AND MULCH OVER THE LIMITS CALLED FOR ON THE CONSTRUCTION DRAWINGS.

B. MATERIALS – GRASS SEED SHALL BE A MIXTURE OF:

PENSACOLA BAHIA (50% SCARIFIED SEED)	80 LBS/ACRE
HULLED BERMUDA	20 LBS/ACRE
BROWN TOP MILLET	30 LBS/ACRE

IN THE FALL AND WINTER MONTHS (OCT. THRU FEB.) AND WITH THE APPROVAL OF THE CITY, ANNUAL RYE GRASS SHALL BE SUBSTITUTED IN EQUAL AMOUNTS FOR THE BROWN TOP MILLET. SEED SHALL BE PREMIXED BY A SEED COMPANY TO THE PROPORTIONS DESCRIBED ABOVE, WITH CERTIFICATION FROM THE SUPPLIER PROVIDED TO THE CITY, PRIOR TO USE. MULCH USED SHALL BE STRAW OR HAY CONSISTING OF OATS, RYE OR WHEAT STRAW OF PANGOLA, PEANUT, COASTAL BERMUDA OR BAHIA GRASS HAY. MULCH SHALL BE FREE FROM UNDESIRABLE WEED AND OTHER UNDESIRABLE GRASS.

C. METHODS – GRASSING SHALL BE DONE IMMEDIATELY UPON COMPLETION OF THE FINE GRADING OPERATION. HOWEVER, NO SEEDING SHALL BE DONE WHEN THE GROUND IS FROZEN OR UNDULY WET. THE RATE OF SPREAD FOR THE SEED MATERIAL SHALL BE ONE HUNDRED AND THIRTY (130) POUNDS PER ACRE. APPROXIMATELY TWO INCHES (2"), LOOSE THICKNESS, OF MULCH MATERIAL SHALL BE APPLIED INFORMALLY OVER THE GRASSED AREAS (APPROXIMATELY 1 1/2 BALES PER 1000 SQUARE FEET). THE MULCH MATERIAL SHALL BE CUT INTO THE SOIL WITH A DISC HARROW OR OTHERWISE ANCHORED DOWN.

D. FERTILIZER –
1. ANALYSIS OF SOILS SHALL BE OBTAINED BY SUBMITTAL OF SAMPLES TO VOLUSIA COUNTY AGRICULTURAL DEPARTMENT (PHONE: 258-7000). ALL APPLICATION RATES WILL BE BASED ON THIS REPORT. SUBMIT A COPY OF THIS REPORT TO THE CITY PRIOR TO COMMENCING ANY SOIL MODIFICATION.

2. THE FERTILIZER SHALL BE A COMMERCIAL GRANULAR TYPE WITH A CHEMICAL DESIGNATION AS RECOMMENDED IN THE SOILS ANALYSIS REPORT.

3. THE NUMERICAL DESIGNATIONS FOR FERTILIZER INDICATE THE MINIMUM PERCENTAGES (RESPECTIVELY) OF (1) TOTAL NITROGEN, (2) AVAILABLE PHOSPHORIC ACID AND (3) WATER SOLUBLE POTASH CONTAINED IN THE FERTILIZER.
a) AT LEAST 50 PERCENT (50%) OF THE PHOSPHORIC ACID SHALL BE FROM A NORMAL SUPER PHOSPHATE OR AN EQUIVALENT SOURCE WHICH WILL PROVIDE A MINIMUM OF TWO UNITS OF SULFUR.
b) THE AMOUNT OF SULFUR SHALL BE INDICATED ON THE QUANTITIVE ANALYSIS CARD ATTACHED TO EACH BAG OR CONTAINER.

4. COMMERCIAL FERTILIZERS SHALL COMPLY WITH THE STATE FERTILIZER LAWS.

5. FERTILIZER MAY, AT THE DISCRETION OF THE ENGINEER/ARCHITECT, UPON THE PRESENTATION BY THE MANUFACTURE OF SATISFACTORY FACTORY EVIDENCE OF ITS FEASIBILITY, BE APPLIED IN LIQUID FORM.

STANDARD CONSTRUCTION DETAIL
SEEDING AND MULCHING
INDEX R-7
MARCH 2014

IN ORDER TO ENSURE THAT NEW DEVELOPMENTS WITHIN THE CITY ARE CONSTRUCTED SUBSTANTIALLY IN ACCORDANCE WITH CITY REGULATIONS AND THE APPROVED DRAWINGS "AS-BUILT" DRAWINGS ARE REQUIRED:

THE FOLLOWING INFORMATION IS REQUIRED ON ALL PAVING AND DRAINAGE "AS-BUILT" DRAWINGS:

1. PAVEMENT AND CURB WIDTHS SHALL BE VERIFIED AND DIMENSIONED FOR EACH STREET AT EACH BLOCK. ALL RADII AT INTERSECTIONS SHALL BE VERIFIED AND DIMENSIONED. THIS INFORMATION TO CLEARLY INDICATE IT AS AS BEING "AS-BUILT" INFORMATION.
2. ROADWAY ELEVATIONS SHALL BE RECORDED AT ALL GRADE CHANGES OR OTHER INTERVALS AS NEEDED ALONG ALL STREETS. STREET CENTERLINE AND CURB INVERT ELEVATIONS SHALL BE RECORDED AS NOTED. THE "AS-BUILT" CENTERLINE PROFILE OF ALL STREETS SHALL ALSO BE SHOWN ON THE PLAN AND PROFILE SO IT MAY BE COMPARED TO THE EXISTING AND DESIGNED PROFILE GRADE LINES. ALL STREET CENTERLINES ON "AS-BUILTS" SHALL BE LABELED WITH STREET NAME AND RIGHT-OF-WAY WIDTH ON EVERY PAGE.
3. STORM DRAINAGE STRUCTURES SHALL BE LOCATED AND/OR DIMENSIONED FROM CENTERLINES OR LOT LINES AS APPROPRIATE.
4. STORM DRAINAGE PIPE INVERT AND STRUCTURE TOP AND BOTTOM ELEVATIONS SHALL BE RECORDED AND CLEARLY DENOTED AS "AS-BUILT" INFORMATION. DESIGN ELEVATIONS SHALL BE CROSSED OUT AND "AS-BUILT" INFORMATION WRITTEN NEXT TO IT.
5. STORM DRAINAGE PIPE MATERIAL, LENGTH, AND SIZE SHALL BE MEASURED AND/OR VERIFIED. THIS INFORMATION TO CLEARLY INDICATE IT AS BEING "AS-BUILT" INFORMATION.
6. ALL APPLICABLE TOPOGRAPHIC INFORMATION, PERTINENT TO THE ON SITE DRAINAGE SYSTEM SUCH AS DITCHES, LAKES, CANALS, ETC. THAT ARE DEEMED APPROPRIATE BY THE CITY SHALL BE NOTED. NORMALLY, RECORDING ELEVATIONS EVERY 100 FEET AT THE TOP OF BANK AND TOE OF SLOPE WILL BE REQUIRED. MEASUREMENTS SHALL BE TAKEN AND RECORDED IN ORDER TO ACCURATELY TIE DOWN THESE FEATURES TO THE ROADWAY CENTERLINES AND TO PLAT LINES. WHENEVER POSSIBLE, CONTOUR LINES SHALL BE UTILIZED TO GRAPHICALLY DESCRIBE THESE TOPOGRAPHIC FEATURES.
7. RETENTION AREAS SHALL HAVE THEIR TOP-OF-BANK AND BOTTOM ELEVATIONS RECORDED. ACTUAL MEASUREMENTS SHALL BE TAKEN AND DIMENSIONS RECORDED OF THE SIZE OF ALL RETENTION AREAS. MEASUREMENTS SHALL BE DONE FROM TOP-OF-BANK TO TOP-OF-BANK WITH SIDE SLOPES INDICATED. SEPARATE CALCULATIONS SHALL BE SUBMITTED TO INDICATE REQUIRED AND PROVIDED RETENTION VOLUMES.
8. STORM DRAINAGE SWALE CENTERLINES SHALL BE LOCATED AND ELEVATIONS OF FLOW LINE SHALL BE RECORDED EVERY 100 FEET.
9. ANY SPECIAL FEATURES SUCH AS CONCRETE FLUMES, LAKE BANKS, WALLS, FENCING, ETC., WHICH WERE A PART OF THE APPROVED CONSTRUCTION DRAWINGS SHOULD ALSO BE LOCATED AND DIMENSIONED.
10. ACTUAL MATERIALS USED AND ELEVATIONS AND DIMENSIONS OF OVERFLOW WEIR STRUCTURES AND SKIMMERS SHALL BE NOTED ON THE "AS-BUILT".

THE FOLLOWING INFORMATION IS REQUIRED ON ALL WATER AND SEWER "AS-BUILT" DRAWINGS:

11. SANITARY SEWER MANHOLES SHALL BE VERIFIED AND DIMENSIONED FROM STREET CENTERLINES OR LOT LINES AS APPROPRIATE. ALL RIM AND INVERT ELEVATIONS SHALL BE VERIFIED AND RECORDED. THIS INFORMATION TO CLEARLY INDICATE IT AS BEING "AS-BUILT" INFORMATION.
12. SANITARY SEWER LINE LENGTHS, SIZES, MATERIAL, SLOPE, ETC., SHALL BE VERIFIED AND RECORDED. THIS INFORMATION TO CLEARLY INDICATE IT AS BEING "AS-BUILT" INFORMATION.

STANDARD CONSTRUCTION DETAIL
REQUIREMENTS FOR "AS-BUILT" DRAWINGS
INDEX M-1A
MARCH 2014

13. SEWER LATERALS SHALL BE VERIFIED AND RECORDED AT THEIR CLEAN-OUT LOCATIONS. STATIONING AND OFFSET DISTANCES SHALL BE MEASURED FROM DOWNSTREAM MANHOLES TOWARDS UPSTREAM MANHOLES.
14. LIFT STATIONS AND FORCE MAINS SHALL BE VERIFIED AND DIMENSIONED FROM STREET CENTERLINES OR LOT LINES AS APPROPRIATE. FORCE MAIN DEPTH AND LOCATION INCLUDING VALVES WILL BE PROVIDED AND TIED TO PERMANENT ABOVE GRADE FEATURES EVERY 500 FEET. DIMENSIONAL AND ELEVATION INFORMATION INDICATED ON THE APPROVED PLAN SHALL BE VERIFIED AND RECORDED. THIS INFORMATION TO CLEARLY INDICATE IT AS BEING "AS-BUILT" INFORMATION. BURIED ELECTRICAL SERVICE LINE SHALL BE CLEARLY DIMENSIONED, LOCATED AND LABELED.
15. CURB CUTS OR METAL TABS, USED TO MARK SEWER LATERALS, WATER SERVICES AND WATER VALVES, SHALL BE VERIFIED FOR PRESENCE AND ACCURACY OF LOCATION.
16. WATER MAIN LINES SHALL BE DIMENSIONED OFF THE BACK OF CURB OR EDGE OF PAVEMENT IF NO CURB IS PRESENT. WATER MAIN LINE MATERIAL, SIZE, LENGTH AND DEPTH PLACED SHALL ALSO BE NOTED. THIS INFORMATION TO CLEARLY INDICATE IT AS BEING "AS-BUILT" INFORMATION.
17. WATER VALVES, TEES, ALL SERVICES, BLOW – OFFS AND FIRE HYDRANTS SHALL BE LOCATED BY TYING THEM TO SANITARY SEWER MANHOLES. STATIONING AND OFFSET DISTANCES SHALL BE MEASURED FROM DOWNSTREAM MANHOLES TO UPSTREAM MANHOLES.

THE FOLLOWING INFORMATION IS GENERAL REQUIREMENTS OF ALL "AS-BUILT" DRAWINGS:

18. FOR PERPENDICULAR CROSSINGS OF STORM WATER, SANITARY SEWER, POTABLE WATER, OR RECLAIMED WATER, THE "AS-BUILT" PLANS SHALL CLEARLY INDICATE WHICH UTILITIES ARE LOCATED OVER OR UNDER OTHER UTILITIES, AS NECESSARY.
19. WHEN STORM WATER, POTABLE WATER, RECLAIMED WATER, OR SANITARY SEWER IMPROVEMENTS ARE LOCATED WITHIN AN EASEMENT, THE "AS-BUILT" SHALL ACCURATELY DEPICT THE LOCATION OF THE EASEMENT ITSELF AS WELL AS THE EXACT LOCATION OF THE IMPROVEMENTS WITHIN THE EASEMENT. THIS IS REQUIRED IN ORDER TO VERIFY THAT THE IMPROVEMENTS HAVE BEEN PROPERLY LOCATED AND TO ENSURE THAT FUTURE SUBSURFACE EXCAVATION TO PERFORM REMEDIAL REPAIR CAN BE ACCOMPLISHED WITHOUT DISTURBANCE BEYOND THE EASEMENT. SUCH DOCUMENTATION AND THE ASSOCIATED PROPOSED EASEMENT DOCUMENT WITH LEGAL DESCRIPTION SHALL BE SUBMITTED FOR CITY REVIEW AND APPROVAL PRIOR TO RECORDING OF SAID EASEMENT. UPON CITY APPROVAL, THE EASEMENT SHALL BE RECORDED VIA A SEPARATE LEGAL INSTRUMENT AND SHALL NOT BE INCLUDED AS PART OF HOMEOWNER COVENANTS AND RESTRICTIONS.
20. SUBMIT CERTIFIED PAPER PRELIMINARY "AS-BUILT" (24"x36") WITH REQUEST FOR FINAL INSPECTION. SUBMIT 3 SETS SHOWING WATER FACILITIES, 3 SETS WITH SEWER FACILITIES, AND 3 SETS WITH PAVING AND DRAINAGE FACILITIES. FOLLOWING FINAL INSPECTION AND COMMENTS, THE CONTRACTOR SHALL REVISE AS-BUILTS TO ADDRESS CITY COMMENTS AND SUBMIT 3 SETS CERTIFIED FINAL "AS-BUILTS" ALONG WITH 1 SET CERTIFIED MYLARS AND 1 CD-ROM CONTAINING AUTO-CAD FILES AND PDF VERSIONS SHOWING ALL "AS-BUILT" SHEETS. ALL "AS-BUILT" DRAWINGS SHALL BE CERTIFIED BY A REGISTERED LAND SURVEYOR AND ENGINEER OF RECORD.
21. INDICATE VERTICAL DATUM REFERENCE ON ALL SHEETS.
22. CAD FILE OF "AS-BUILTS" SHALL BE IN STATE PLANE COORDINATES; FILE SHOULD INCLUDE REFERENCE TO PROJECTION. (FLORIDA EAST, NAD83)
23. ALL "AS-BUILT" DRAWINGS SHALL BE PREPARED BY A FLORIDA REGISTERED LAND SURVEYOR USING THE FINAL APPROVED SITE DESIGN PREPARED BY THE ENGINEER OF RECORD. LINE WEIGHTS, LINETYPES, AND ANNOTATION SHALL BE MANAGED IN A MANNER THAT CLEARLY DISTINGUISHES DESIGN INFORMATION FROM "AS-BUILT" INFORMATION.
24. ALL "AS-BUILT" SHEETS SHALL INCLUDE A TITLE BLOCK AND CLEARLY STATE PROJECT NAME, PROJECT SURVEYOR, DATE OF FIELD WORK, AS WELL AS PROJECT CERTIFICATION BLOCK FROM THE ENGINEER OF RECORD.

NOTE: REFERENCES TO WATER SHALL MEAN BOTH POTABLE AND RECLAIMED WATER.

STANDARD CONSTRUCTION DETAIL
REQUIREMENTS FOR AS BUILT DRAWINGS
INDEX M-1B
MARCH 2014

GENERAL NOTES:

1. ALL CONSTRUCTION SHALL BE IN ACCORDANCE WITH THE CITY OF ORMOND BEACH'S LAND DEVELOPMENT CODE REQUIREMENTS, AND THE STANDARD CONSTRUCTION DETAILS AND CONSTRUCTION SPECIFICATIONS (SCDCS). AN ENGINEERING PERMIT AND TREE REMOVAL PERMIT IS REQUIRED PRIOR TO STARTING CONSTRUCTION.
2. NO LAND SHALL BE CLEARED, EXCAVATED OR FILLED AND NO STRUCTURE SHALL BE ERECTED, REPAIRED OR DEMOLISHED WITHOUT PROPER PERMIT(S) AS REQUIRED BY THE CITY OF ORMOND BEACH.
3. NOTIFY THE CITY OF ORMOND BEACH'S ENGINEERING DIVISION AT 676-3269 48 HOURS PRIOR TO THE START OF CONSTRUCTION.
4. ANY CONSTRUCTION CHANGES TO APPROVED PLANS SHALL BE SUBMITTED TO THE CITY OF ORMOND BEACH FOR APPROVAL PRIOR TO PERFORMING THE WORK.
5. ROAD CONSTRUCTION AND PIPE INSTALLATION COMPACTION AND DENSITY TESTING SHALL CONFORM TO THE CITY OF ORMOND BEACH'S MINIMUM REQUIREMENTS. CERTIFIED COPIES OF TEST REPORTS SHALL BE SUBMITTED TO THE CITY INSPECTOR AND THE CITY'S ENGINEERING DIVISION.
6. A PRE-PAVING UTILITY INSPECTION MUST BE REQUESTED AND COMPLETED PRIOR TO THE PAVING OF ALL ROADS, STREETS, AND PARKING AREAS.
7. A FINAL INSPECTION, TO BE CONDUCTED BY THE CITY OF ORMOND BEACH, SHALL BE PERFORMED ON ALL CONSTRUCTION. THE DESIGN ENGINEER SHALL NOTIFY THE CITY OF ORMOND BEACH'S ENGINEERING DIVISION 676-3269 WHEN REQUESTING A FINAL INSPECTION.
8. THREE COMPLETE SETS OF AS-BUILT DRAWINGS (5 FOR SUBDIVISIONS) ARE REQUIRED TO BE SUBMITTED TO THE CITY OF ORMOND BEACH PRIOR TO REQUESTING A FINAL INSPECTION.
9. THE CITY HAS A CONTRACTOR FOR ROLL OFF SERVICE. NO OTHER CONTRACTOR SHALL BE PERMITTED TO PROVIDE THIS SERVICE. VERIFY COMPANY UNDER CONTRACT WITH THE CITY.
10. CONSTRUCTION SITES THAT DISTURB ONE ACRE OR MORE WILL BE REQUIRED TO SEEK COVERAGE UNDER THE GENERIC PERMIT FOR STORM WATER DISCHARGE FROM LARGE AND SMALL CONSTRUCTION ACTIVITIES. IN ACCORDANCE WITH THIS REQUIREMENT, A STORM WATER POLLUTION PREVENTION PLAN (SWPP) MUST BE SUBMITTED TO THE CITY'S ENGINEERING DIVISION PRIOR TO CONSTRUCTION TO BE IN COMPLIANCE WITH THE PERMIT.
11. CONTRACTOR WILL FOLLOW REQUIRED WASTE MANAGEMENT PRACTICES
12. SEEDING OR SODDING SHALL BE INITIATED FOR EROSION AND SEDIMENT CONTROL ON DISTURBED AREAS AS SOON AS PRACTICABLE IN PORTIONS OF THE SITE WHERE CONSTRUCTION ACTIVITIES HAVE TEMPORARILY OR PERMANENTLY CEASED.
13. ANY FIELD MODIFICATIONS OR DEVIATIONS TO THIS CONSTRUCTION PLAN REQUIRES WRITTEN APPROVAL BY BOTH THE ENGINEER OF RECORD AND THE CITY OF ORMOND BEACH ENGINEERING DIVISION.

STANDARD CONSTRUCTION DETAIL
GENERAL CONSTRUCTION NOTES
INDEX M-2
MARCH 2014

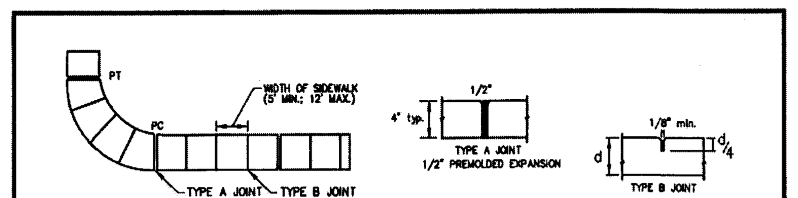

1. SIDEWALKS, BIKEPATHS, RAMPS, AND DRIVEWAY APRONS SHALL BE CONSTRUCTED OF PLAIN PORTLAND CEMENT CONCRETE WITH A MAXIMUM SLUMP OF 3 INCHES, A MINIMUM DEVELOPED COMPRESSIVE STRENGTH OF 2500 P.S.I. IN 28 DAYS, AND A MINIMUM UNIFORM THICKNESS OF 4 INCHES WHERE INTENDED SOLELY FOR PEDESTRIAN TRAFFIC, AND 6 INCHES THICK WHERE MOTOR VEHICLES ARE LIKELY TO CROSS. SIDEWALKS SHALL BE 5 FOOT WIDE UNLESS OTHERWISE SHOWN ON PLANS.
2. SIDEWALKS AND BIKE PATHS SHALL BE PLACED PARALLEL TO, AND ONE FOOT WITHIN THE RIGHT-OF-WAY LINE EXCEPT THAT THE CITY MAY APPROVE DEVIATIONS TO SAVE SPECIMEN TREES PROVIDED THAT THE PAVEMENT REMAINS WITHIN THE RIGHT-OF-WAY, IS NOT DIMINISHED IN WIDTH, AND REMAINS AT LEAST 4 FEET FROM THE EDGE OF THE STREET PAVEMENT, UNLESS OTHERWISE APPROVED BY THE CITY.
3. THE TOP OF THE CONCRETE SHALL BE AT AN ELEVATION NO LOWER THAN THE CROWN OF THE ADJACENT ROADWAY, AND NO HIGHER THAN 6 INCHES ABOVE THE CROWN UNLESS APPROVED BY THE CITY TO MAKE A MORE NATURAL TRANSITION WITH THE ADJACENT LAND.
4. ALL WALKS SHALL HAVE A CROSS SLOPE OF 1/4 INCH PER FOOT AND SHALL NOT EXCEED A LONGITUDINAL SLOPE OF 1:20, EXCEPT AT DESIGNATED RAMPS THAT SHALL NOT EXCEED 1:12. PROVIDE A TACTIBLE WARNING SURFACE AT ALL RAMPS PER A.D.A. THE CONTRACTOR SHALL INSURE THAT ALL PROVISIONS OF A.D.A AND FLORIDA ACCESSIBILITY CODE ARE MET.*
5. ISOLATION JOINTS (TYPE A JOINTS) SHALL BE PROVIDED BETWEEN EXISTING SLABS OR STRUCTURES AND FRESH CONCRETE, TO SEPARATE PEDESTRIAN SECTIONS FROM SECTIONS WHICH WILL ENCOUNTER VEHICLE TRAFFIC, TO SEPARATE FRESH PLACEMENT FROM CONCRETE WHICH HAS SET FOR MORE THAN 60 MINUTES, AND NO FARTHER APART THAN 100 FEET IN SIDEWALKS AND BIKEPATHS. JOINT MATERIAL SHALL BE SPECIFIED IN FDOT STANDARDS AND SPECIFICATIONS AND SHALL BE RUBBER, PLASTIC OR OTHER APPROVED NON-BIODEGRADABLE ELASTOMERIC MATERIAL. WOOD IS PROHIBITED.
6. CONTROL JOINTS (TYPE B JOINTS) SHALL BE TOOLED INTO THE FRESH CONCRETE TO A DEPTH EQUAL TO 1/4 THE SLAB THICKNESS AND SPACED APART A DISTANCE EQUAL TO THE WIDTH OF THE SLAB, AT MINIMUM SPACING OF 5', MAX SPACING OF 12'.
7. THE SLAB SURFACE SHALL BE BROOM FINISHED TO BE SLIP RESISTANT, AND SHALL MATCH AS CLOSELY AS POSSIBLE THE FINISH OF THE EXISTING ADJACENT SLABS AND ALL EDGES SHALL BE TOOLED TO ELIMINATE SHARP CORNERS.
8. THE BEARING SUBSURFACE SHALL HAVE ALL ORGANIC, LOOSE, AND DELETERIOUS MATTER REMOVED, AND THE REMAINING CLEAN SOIL SHALL BE SMOOTH, SOUND, AND SOLID. ANY FILL MATERIAL SHALL BE COMPACTED WITH A VIBRATORY OR IMPACT COMPACTION MACHINE IN MAXIMUM 12 INCH LIFTS OR COMPACTED WITH A HAND TAMPER IN MAXIMUM 4 INCH LIFTS. THE CITY SHALL REQUIRE A COMPACTION TEST FOR EACH LIFT IF THE TOTAL FILLED SECTION IS MORE THAN 12 INCHES DEEP OR IF THE SUBSURFACE HAS BEEN DISTURBED MORE THAN 12 INCHES DEEP. WHERE SUCH TEST IS REQUIRED, THE RESULTS SHALL SHOW A MINIMUM PROCTOR FIELD DENSITY OF 95 PERCENT.
9. ALL CONCRETE WORK IN THE RIGHT-OF-WAY SHALL BE INSPECTED BY THE CITY AFTER THE SUBSOIL IS PREPARED AND THE FORMS ARE SET, BUT BEFORE THE CONCRETE PLACEMENT BEGINS.
10. THE CONTRACTOR SHALL BE RESPONSIBLE FOR PROTECTING THE FINISHED SLAB FROM ALL DAMAGE AND VANDALISM UNTIL THE CITY ACCEPTS OR APPROVES THE SLAB, AFTER WHICH TIME THE OWNER OF THE ABUTTING LAND SHALL BE RESPONSIBLE FOR THE SLAB IN ACCORDANCE WITH THE CITY CODE. ANY SLAB SECTION DAMAGED OR VANDALIZED PRIOR TO ACCEPTANCE OR APPROVAL SHALL BE CUT OUT BETWEEN JOINTS AND REPLACED. REPAIRS ARE NOT ACCEPTABLE.
11. SIDEWALKS LOCATED WITHIN THE RIGHT-OF-WAY SHALL NOT BE TINTED, STAINED, COLORED, OR COATED.
12. ALL FORMS SHALL BE REMOVED PRIOR TO ACCEPTANCE OR APPROVAL AND THE DISTURBED GROUND SHALL BE BACKFILLED, REGRADED, AND SODDED SO THAT THE WEAR SURFACE OF THE CONCRETE IS REASONABLY FLUSH WITH THE ADJACENT GRADE.

STANDARD CONSTRUCTION DETAIL
SIDEWALK, RAMP, AND DRIVEWAY APRON CONSTRUCTION REQUIREMENTS
NTS
INDEX M-3
MARCH 2014

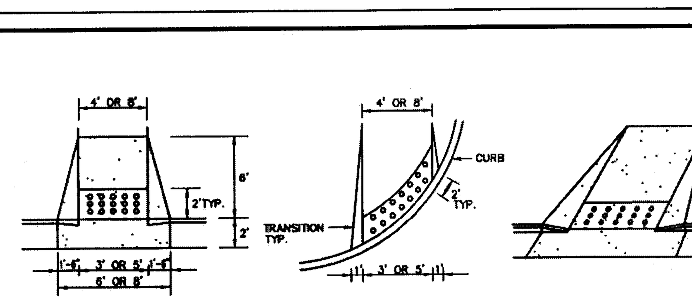

NOTES:

1. RAMP LOCATIONS ARE TO BE COORDINATED WITH AND IN CONFORMANCE WITH CROSSWALK MARKING DETAILS SHOWN IN THE PLANS.
2. CURBED RAMPS SHALL HAVE FLARED SIDES WITH A MAXIMUM SLOPE OF 12:1.
3. RAMPS SHALL HAVE A DETECTABLE WARNING SURFACE AS SHOWN.
4. RAMPS ARE TO BE CONSTRUCTED AT ALL LOCATIONS SHOWN IN THE PLANS EVEN WHEN A SIDEWALK IS NOT CONSTRUCTED CONCURRENTLY.
5. NO CURB TRANSITION IS NEEDED FOR MIAMI CURBS.
6. ALL RAMPS SHALL BE CONSTRUCTED IN ACCORDANCE WITH FDOT INDEX NO. 304 AND HANDICAPPED ACCESSIBILITY REQUIREMENTS IN ACCORDANCE WITH THE AMERICAN DISABILITIES ACT.

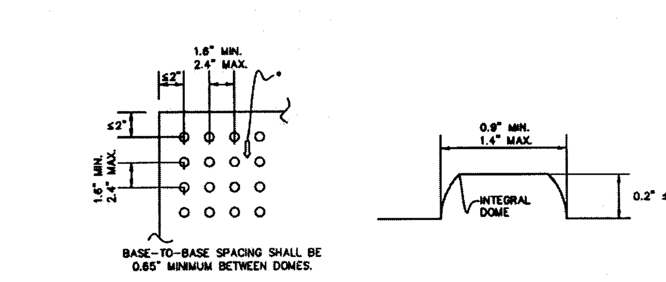

NOTES:

- ON RAMPS THAT ARE PERPENDICULAR WITH THE CURB LINE, THE DOME PATTERN SHALL BE IN-LINE WITH THE DIRECTION OF TRAVEL. ON RAMPS INTERSECTING CURBS ON A RADIUS, THE DOME PATTERN SHALL BE IN-LINE WITH THE DIRECTION OF TRAVEL TO THE EXTENT PRACTICAL.

STANDARD CONSTRUCTION DETAIL
SIDEWALK AND BIKE PATH RAMP
NTS
INDEX M-4
MARCH 2014

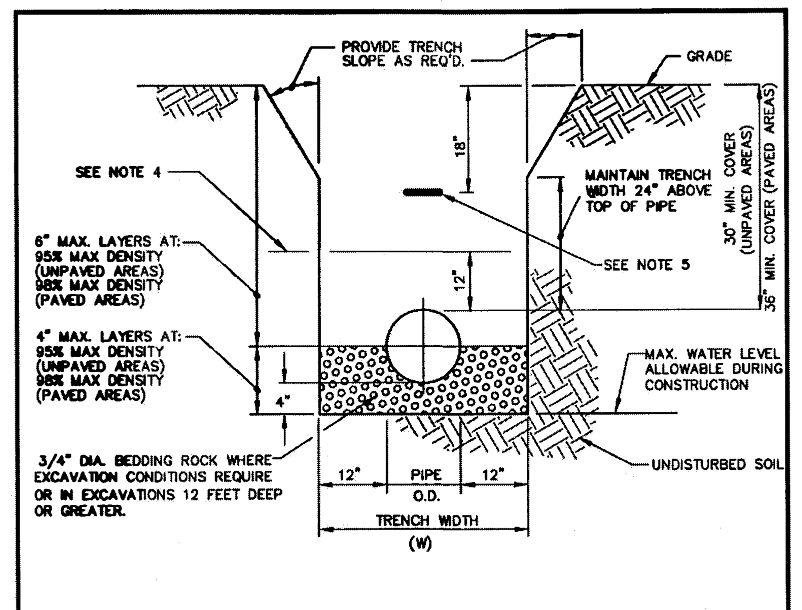

PIPE INSTALLATION DETAIL

NOTES:

1. WHERE SOIL CONDITIONS CAN NOT BE MAINTAINED AS SHOWN ABOVE, PROVIDE APPROVED METHOD OF CONSTRUCTION.
2. SHEETING WILL BE REQUIRED AS DETERMINED IN THE FIELD.
3. COMPACTION PERCENTAGES SHOWN REFER TO A.A.S.H.T.O. T-180. PROVIDE COPIES OF CERTIFIED TEST REPORTS TO CITY INSPECTOR.
4. MECHANICAL COMPACTION NOT ALLOWED BELOW THIS LEVEL.
5. INSTALL METALLIC TAPE OVER FULL LENGTH OF PIPE.

STANDARD CONSTRUCTION DETAIL
PIPE INSTALLATION
NTS
INDEX M-9
MARCH 2014

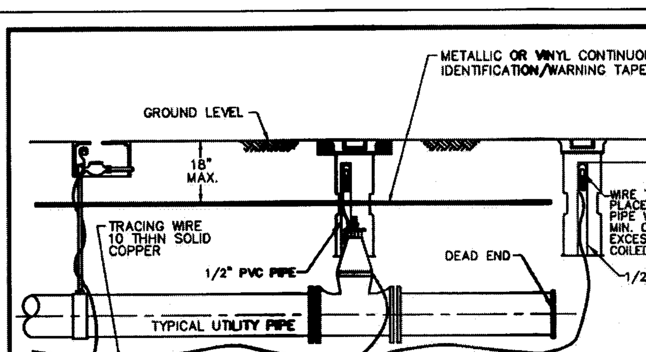

ALL PVC PIPE, OR OTHER CITY APPROVED NONMETALLIC PIPE INSTALLED WITHIN THE CITY'S WATER, SANITARY SEWER, OR RECLAIMED WATER SYSTEMS, SHALL BE INSTALLED WITH 10 THHN SOLID COPPER TRACING WIRE. IF PIPE IS INSTALLED BY DIRECTIONAL BORE, USE (2) 10 THHN SOLID COPPER TRACING WIRE.

THE TRACING WIRE MUST BE INSTALLED DIRECTLY BELOW THE PIPE AND BROUGHT TO THE SURFACE AT 500' MINIMUM INTERVALS. WIRE SHALL EXTEND A MINIMUM OF 12" ABOVE GRADE AT EACH INTERVAL AND BE COILED AND PLACED IN A VALVE BOX, METER BOX, MANHOLE, CLEANOUT OR OTHER APPLICABLE STRUCTURE.

TRACING WIRE BETWEEN INTERVALS SHALL BE INSTALLED SO AS TO PROVIDE CONTINUOUS CURRENT WHEN LINE LOCATION EQUIPMENT IS CONNECTED TO THE TRACING WIRE. WIRE BRANCHING FROM MAIN LINES SHALL BE LINKED BY A CITY APPROVED CONNECTOR SUCH AS KING # 2011 SAFETY SEALED CONNECTORS OR APPROVED EQUAL.

COLOR CODING:

POTABLE WATER SYSTEM:	BLUE
RECLAIMED WATER SYSTEM:	LAVENDER
SANITARY SEWER FORCE MAIN SYSTEM:	GREEN

1. POTABLE WATER AND RECLAIMED WATER SYSTEMS: WIRE SHALL BE INSTALLED BELOW ALL MAINS AND SERVICE LINES AND ATTACHED TO VALVES, HYDRANTS AND FITTINGS. WIRE INSTALLED WITH SERVICE LINES SHALL CONNECT TO THE WIRE INSTALLED BELOW THE MAIN AND EXTEND TO THE CURB STOP.
2. FIRE SPRINKLER LINES: WIRE SHALL CONNECT TO THE WIRE INSTALLED BELOW THE MAIN AND EXTEND TO THE RISER CONNECTION.
3. SANITARY SEWER FORCE MAINS: WIRE SHALL BE INSTALLED BELOW THE FORCE MAIN AND ATTACHED TO ALL VALVES AND FITTINGS AND BROUGHT TO THE SURFACE AND PLACED IN A METAL, CITY APPROVED, VALVE BOX.
4. DEAD END MAINS: WIRE SHALL BE PLACED IN A PROPERLY IDENTIFIED METAL VALVE BOX AT THE END OF THE RUN.
5. WIRE SHALL NOT BE FASTENED OR COILED TO VALVE OPERATING NUT.

STANDARD CONSTRUCTION DETAIL
UTILITY PIPE LOCATION MATERIALS
NTS
INDEX M-10
MARCH 2014

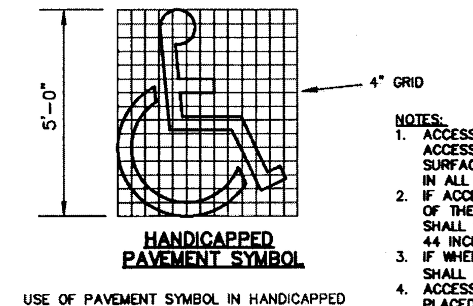

NOTES:

1. ACCESSIBLE PARKING SPACES AND ACCESS AISLES SHALL BE LEVEL WITH SURFACE SLOPES NOT EXCEEDING 2.0% IN ALL DIRECTIONS.
2. IF ACCESSIBLE AISLE CROSSES THE TOP OF THE HANDICAP SPACE, WHEEL STOP SHALL BE USED TO MAINTAIN MINIMUM 44 INCH CLEAR ACCESSIBLE ROUTE.
3. IF WHEEL STOP IS USED, PARKING SHALL HAVE 18' CLEAR SPACE.
4. ACCESSIBLE PARKING SIGN SHALL BE PLACED AS TO NOT ENCROACH INTO THE ACCESSIBLE AISLE MINIMUM 44 INCH CLEAR ACCESSIBLE ROUTE.
5. NUMBER OF ACCESSIBLE PARKING SPACES SHALL MEET REQUIREMENT OF THE LATEST ISSUE OF THE FLORIDA ACCESSIBILITY CODE FOR BUILDING CONSTRUCTION

USE OF PAVEMENT SYMBOL IN HANDICAPPED PARKING SPACES IS REQUIRED. WHEN USED THE SYMBOL SHALL BE 5 FT. HIGH AND WHITE IN COLOR. TO BE INSTALLED IN ACCORDANCE WITH FDOT STANDARD INDEX #17346

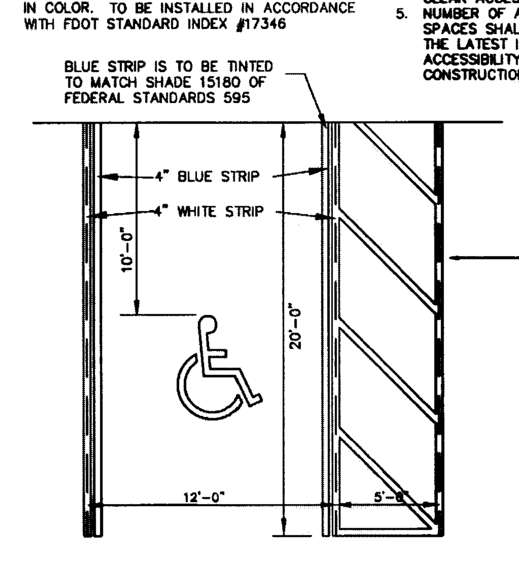

STANDARD CONSTRUCTION DETAIL
TYPICAL MARKINGS FOR HANDICAPPED PARKING
NTS
INDEX M-12A
MARCH 2014

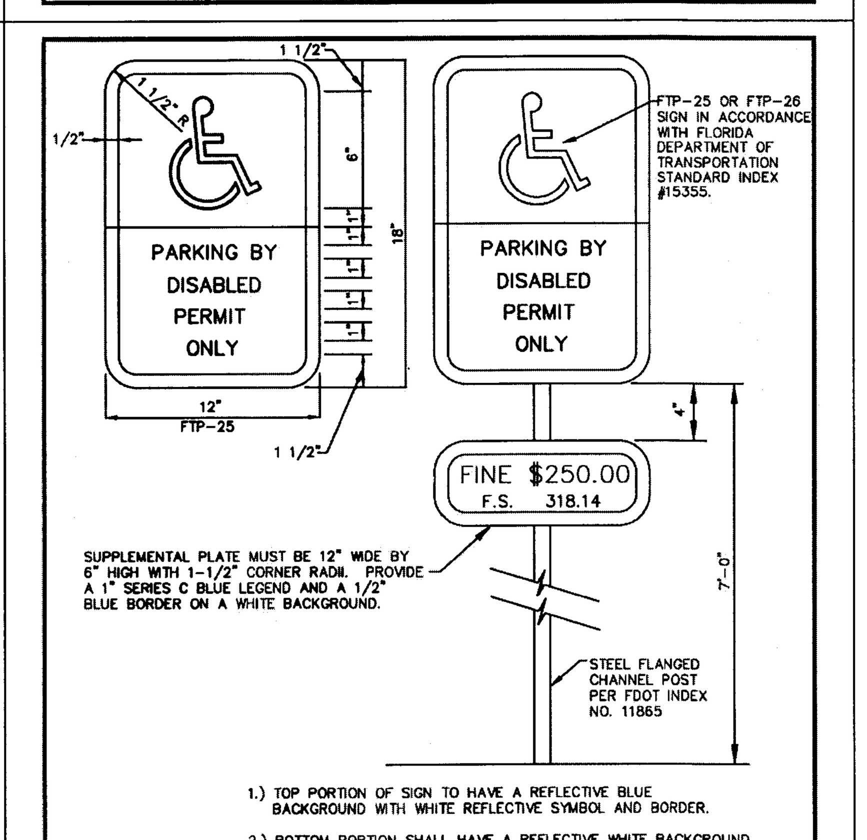

1.) TOP PORTION OF SIGN TO HAVE A REFLECTIVE BLUE BACKGROUND WITH WHITE REFLECTIVE SYMBOL AND BORDER.
2.) BOTTOM PORTION SHALL HAVE A REFLECTIVE WHITE BACKGROUND WITH BLACK OPAQUE LEGEND AND BORDER.
3.) SIGN MAY BE FABRICATED ON ONE PANEL OR TWO.
4.) SIGNS ARE TO BE MOUNTED AT STANDARD HEIGHT. (7' FROM PAVEMENT TO BOTTOM OF SIGN.)

STANDARD CONSTRUCTION DETAIL
HANDICAP PARKING SIGN DETAIL
NTS
INDEX M-12B
MARCH 2014

REVISION

NO.	DATE	APPR.	REVISION

JUN 0 1 2015
MARK STEVEN DOWST LICENSE No. 35503 STATE OF FLORIDA PROFESSIONAL ENGINEER

MARK DOWST & ASSOCIATES, INC.
ENGINEERS * PLANNERS * SURVEYORS
EB 4335 LB 4335
536 N. HALIFAX AVENUE, SUITE # 100 * DAYTONA BEACH, FLORIDA 32118 * (386) 258-7999

SCALE	DESIGNED	DRAWN	CHECKED	DATE
N.T.S.	MSD	CAD	MSD	02-20-15
			BY	DATE

ORMOND BEACH CITY DETAILS
ENVIRONMENTAL LEARNING CENTER
ORMOND BEACH, FLORIDA

PROJECT NO. 1251
C8
1251-CITYDET

GENERAL NOTES
WATER SYSTEM CONSTRUCTION

1. THE CITY'S PUBLIC UTILITIES DEPARTMENT SHALL BE NOTIFIED PRIOR TO BEGINNING ANY WATER SYSTEM CONSTRUCTION.
2. DEWATERING SHALL BE PROVIDED TO KEEP GROUNDWATER ELEVATION A MINIMUM OF 6 INCHES BELOW WATER MAIN BEING LAID.
3. ALL WATER MAINS SHALL BE LAID ON A FIRM FOUNDATION WITH ALL UNSUITABLE MATERIAL (MUCK, ROCK, COQUINA, ETC.) REMOVED AND REPLACED WITH CLEAN GRANULAR MATERIAL.
4. TRENCHES SHALL BE BACKFILLED WITH CLEAN GRANULAR MATERIAL IN MAX. 1' LIFTS WITH A MINIMUM COMPACTION OF 98 PERCENT (AASHTO-T180) IN PAVED AREAS AND 90 PERCENT IN UNPAVED AREAS.
5. IT SHALL BE THE CONTRACTOR'S RESPONSIBILITY TO ENSURE THAT TRENCH COMPACTION TESTS BE PROVIDED AT POINTS 1 FOOT ABOVE THE PIPE AND AT 1 FOOT VERTICAL INTERVALS TO FINISH GRADE, AT A MINIMUM SPACING OF EVERY 300 FEET, AND TO FURNISH COPIES OF TEST REPORTS PROMPTLY TO THE CITY INSPECTOR.
6. METALLIZED PIPE LOCATION TAPE SHALL BE LOCATED 15 INCHES BELOW FINISHED GRADE OR AS SPECIFIED BY MANUFACTURER FOR ALL PVC LINES. MARKER TAPE SHALL BE USED ON ALL DUCTILE IRON PIPE.
7. WATER SERVICES (SINGLE 1") SHALL BE POLYETHYLENE TUBING (BLUE IN COLOR) ; POLYBUTYLENE SHALL NOT BE ALLOWED.
8. ALL WATER SERVICE ENDINGS SHALL BE MARKED WITH 4" X 4" LUMBER (PRESSURE TREATED) EXTENDING 4 FEET ABOVE GRADE, WITH WATER SERVICES SECURED 24" ABOVE THE GROUND. WIRE TIES SHALL BE USED TO SECURE THE CURB STOPS TO SUPPORT POSTS.
9. WATER VALVES SHALL BE PLACED AT ALL STREET INTERSECTIONS AND AT MAXIMUM SPACING OF 500 FEET.
10. AT ALL WATER MAIN TEES AND CROSSES, VALVES SHALL BE INSTALLED ON ALL LEGS EXCEPT ONE.
11. APPROVED WATER VALVE TYPES ARE THE FOLLOWING:
    A. STANDARD GATE VALVES LESS THAN 48" DIAMETER RESILIENT SEAT GATE VALVES (AWWA C-509 OR C-515).
    B. TAPPING VALVES AND MECHANICAL TAPPING SLEEVE SHALL BE STAINLESS STEEL. (AWWA C – 509)

STANDARD CONSTRUCTION DETAIL
GENERAL NOTES
WATER SYSTEM CONSTRUCTION
INDEX W-1A
MARCH 2014

GENERAL NOTES
WATER SYSTEM CONSTRUCTION

12. ALL WATER VALVE BOXES SHALL BE ADJUSTED TO FINISH GRADE AND THE LIDS PAINTED BLUE TO MAKE THEM PLAINLY VISIBLE.
13. WATER VALVES SHALL BE COMPLETELY OPENED BY THE CONTRACTOR UPON FINAL ACCEPTANCE OF NEW WATER SYSTEMS IN THE PRESENCE OF UTILITY DEPARTMENT PERSONNEL.
14. HYDRANTS SHALL BE PLACED AT 500 FEET MAXIMUM SPACING IN RESIDENTIAL DEVELOPMENTS AND AT 300 FEET MAXIMUM SPACING IN BUSINESS AND INDUSTRIAL DEVELOPMENTS. ALL WATER MAIN TO WHICH HYDRANTS ARE CONNECTED SHALL BE 8 INCHES MINIMUM.
15. ALL FIRE HYDRANTS SHALL BE CONSTRUCTED TO MAKE THEM EASILY ACCESSIBLE TO FIRE PERSONNEL IN CASE OF FIRE. THE MAIN NOZZLE CONNECTION SHOULD ALWAYS FACE THE STREET AND BE 18-24" ABOVE GRADE.
16. AS STANDARD PRACTICE, WATER MAINS SHALL BE INSTALLED 4 FEET OFF THE BACK OF CURB OR AS APPROVED BY THE CITY.
17. ALL WATER MAINS SHALL BE NSF-APPROVED FOR POTABLE WATER USE, AND SHALL HAVE A MINIMUM COVER OF 36 INCHES. IN SPECIAL CASES WHERE IT IS IMPOSSIBLE OR INAPPROPRIATE TO PROVIDE ADEQUATE COVER, DUCTILE IRON CLASS 350 OR CONCRETE ENCASEMENT MAY BE USED AS APPROVED BY THE CITY.
18. ALL PROPOSED WATER MAINS SHALL BE FLUSHED, CLEANED WITH A POLY PIG, DISINFECTED AND BACTERIOLOGICALLY CLEARED FOR SERVICE IN ACCORDANCE WITH LATEST AWWA STANDARDS AND THE FLORIDA DEPARTMENT OF ENVIRONMENTAL PROTECTION REQUIREMENTS.
19. WATER MAINS SHALL BE AWWA C-900 CL 150, OR D.I.P. CLASS 350 STANDARD CEMENT LINED.
20. UPON CONSTRUCTION COMPLETION AND ACCEPTANCE OF THE SYSTEM, IT SHALL BE THE DESIGN ENGINEER'S RESPONSIBILITY TO ENSURE THAT THE SYSTEM IS PROPERLY CERTIFIED AND ACCEPTED BY THE HEALTH DEPARTMENT, AND THAT <u>CERTIFIED AS-BUILT DRAWINGS</u> (24"x36") ARE PROVIDED TO THE CITY PRIOR TO PAVING AND ANY USE OF THE SYSTEM. PROVIDE THREE (3) BLUELINE COPIES, ONE (1) MYLAR OF AS-BUILT DRAWINGS AND A DIGITAL COPY.
21. MEGALUG OR EQUIVALENT, RESTRAINED JOINT SYSTEM MAY BE USED ON ALL RESTRAINED FITTINGS, VALVES, ETC. MINIMUM DEPTH OF BURY ON PIPES NOT MEETING REQUIRED COVER REQUIREMENTS SHALL FOLLOW THE MOST RECENT DIPRA THRUST RESTRAINT DESIGN GUIDELINES.

STANDARD CONSTRUCTION DETAIL
GENERAL NOTES
WATER SYSTEM CONSTRUCTION
INDEX W-1B
MARCH 2014

GENERAL NOTES
WATER SYSTEM CONSTRUCTION

22. WATER SYSTEMS SHALL BE PRESSURE TESTED AT 150 PSI STATIC PRESSURE FOR A PERIOD OF 2 HOURS PER AWWA STANDARDS. TESTS SHALL BE CONDUCTED BEFORE FINAL PAVING AND IN THE PRESENCE OF THE CITY'S INSPECTOR.
23. ALL WATER SERVICES SHALL BE MARKED WITH A "Λ" SAW CUT INTO THE CURB OR BY METAL TABS SET INTO THE PAVEMENT.
24. ALL WATER VALVES AND BLOW-OFFS SHALL BE MARKED WITH AN "X" SAW CUT INTO THE CURB OR BY METAL TABS SET INTO THE PAVEMENT. LOCATION OF METAL TABS IN INCHES FROM EDGE OF PAVEMENT SHALL EQUAL DISTANCE IN FEET FROM EDGE OF PAVEMENT TO VALVE.
25. UNIFLANGE 1300 SERIES PIPE RESTRAINTS AS MANUFACTURED BY FORD OR APPROVED EQUAL MAY BE USED AS APPROPRIATE FOR RESTRAINING IN-LINE PRESSURE PIPE EACH SIDE OF PIPE JOINT. AS REQUIRED BY RESTRAINT TABLE.
26. TRACING WIRE SHALL BE INSTALLED IN ACCORDANCE WITH UTILITY PIPE LOCATION MATERIALS DETAIL.
27. NO GALVANIZED PIPE, FITTINGS, ETC. ARE ACCEPTED.
28. ALL WATER METERS SHALL BE INSTALLED AT THE RIGHT OF WAY LINE ONLY REGARDLESS OF SIZE.
29. SUBMIT ASSEMBLY CERTIFICATION FOR ALL BACKFLOW PREVENTERS TO THE CITY'S ENGINEERING DEPARTMENT BEFORE FINAL INSPECTION.
30. PIPING FOR RAW WATER SHALL BE OLIVE GREEN FOR ABOVE GROUND PIPING, BURIED PVC PIPING SHALL BE BLUE WITH WHITE COLOR BACKGROUND LOCATOR TAPE PLACED DIRECTLY ON TOP OF THE PIPE AND AT 12" TO 18" ABOVE THE PIPE. THE TAPE SHALL CONTINUOUSLY READ "CAUTION – RAW WATER MAIN BURIED BELOW" OR WHITE WITH LOCATOR TAPE PLACED 12" TO 18" ABOVE THE TOP OF THE PIPE.
31. SEE CHART BELOW FOR WATER MAIN SIZE AND MATERIALS.

M A T E R I A L S		
DIAMETER	MATERIAL	STANDARD
2" - 4"	PVC 1120 / SDR 21	ASTM D 2241
> 4" - 12"	PVC 1120 / CLASS 150	AWWA C 900
> 4" - 12" DEDICATED FIRE LINE	PVC 1120 / CLASS 150	AWWA C 900
14" - 36" (18"- 24" —— DR - 18) (30"- 36" —— DR - 21)	PVC 1120	AWWA C 905
ALL SIZES	HDPE DIPS DR 11	ASTM F 714

NOTE: PVC PIPE COLOR SHALL BE BLUE FOR POTABLE WATER MAINS. BLUE WITH WHITE LOCATOR TAPE OR WHITE WHITE LOCATOR TAPE FOR RAW WATER MAIN.

STANDARD CONSTRUCTION DETAIL
GENERAL NOTES
WATER SYSTEM CONSTRUCTION
INDEX W-1C
MARCH 2014

VALVE SCHEDULE FORD OR EQUIVALENT	
WATER SERVICES	
VALVES AT MAIN	
1"	F1000-4
1 1/2"	B81-666 (REQ. C84-66 PACK JOINT COUPLING)
2"	B81-777 (REQ. C84-77 PACK JOINT COUPLING)
VALVES AT METER	
1"	B94-324W
1 1/2"-2"	BF43-777W

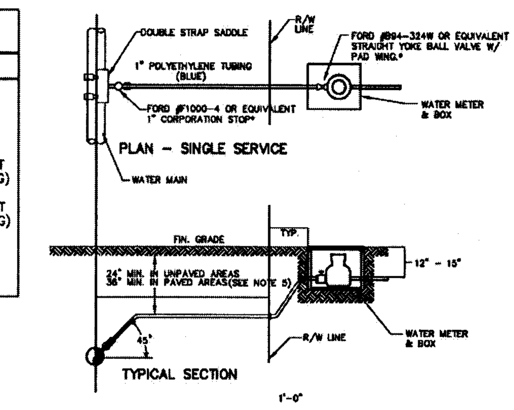

NOTES:

1. HDPE SHALL BE 200 PSI, NSF APPROVED, SDR 9, MEETING ASTM D1248. TUBING SHALL BE ENDOT ENDOTRACE (OR APPROVED EQUAL).
2. REDUCED PRESSURE BACKFLOW PREVENTERS ARE REQUIRED FOR ALL COMMERCIAL SERVICES. TO BE INSTALLED BY A CERTIFIED TECHNICIAN AT OWNERS EXPENSE
3. ALL SERVICE TAPS SHALL BE NO CLOSER THAN 2'-0" STAGGERED INTERVAL OR WITHIN 2'-0" OF BELL OR SPIGOT ENDS.
4. METERS 3" AND LARGER SHALL BE PLACED IN A VAULT TO BE CONSTRUCTED BY DEVELOPER IN ACCORDANCE WITH ARTICLE 4.0484 LDC.
5. IN AREAS TO BE PAVED PROVIDE A 2" MIN. PVC SCHEDULE 40 SLEEVE FOR PE-TUBING. SLEEVE SHALL EXTEND A MIN. OF 2' BEHIND BACK OF CURB AT EACH SIDE OF ROAD.
6. ALL IRRIGATION SERVICES (WATER) MUST HAVE AN APPROVED BACKFLOW PREVENTION DEVICE INSTALLED ON CUSTOMERS SIDE OF WATER METER. THE CUSTOMER IS RESPONSIBLE FOR INSTALLATION AND CERTIFICATION COST. A COPY OF THE CERTIFICATION MUST BE SENT TO THE CITY OF ORMOND BEACH ENGINEERING DEPARTMENT, PRIOR TO FINAL INSPECTION
7. WATER METERS INSTALLED IN AREAS SERVED BY RECLAIMED WATER OR AN ALTERNATE IRRIGATION SUPPLY SHALL BE EQUIPPED WITH DUAL CHECK BACKFLOW PREVENTERS.
7. WATER METERS SHALL BE RADIO READ.

STANDARD CONSTRUCTION DETAIL
WATER LATERAL SERVICE
5/8", 3/4", 1", 1-1/2", 2" METERS
NTS
INDEX W-3
MARCH 2014

ACCEPTABLE MANUFACTURERS: HERSEY MODEL FRP II, WILKINS MODEL 975XL, WATTS MODEL 009 QTS

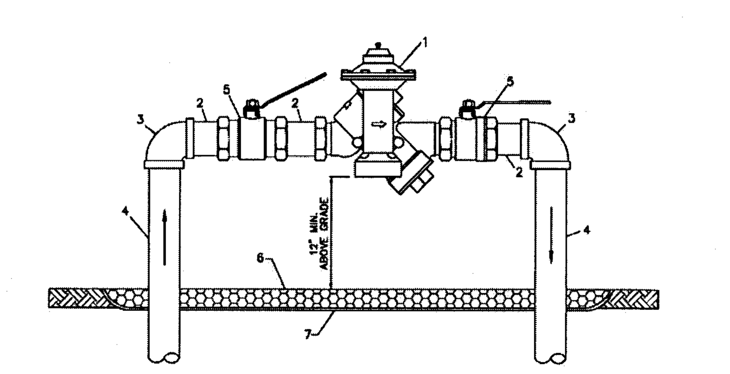

M A T E R I A L S		
ITEM	QUANT.	D E S C R I P T I O N
1	1	3/4", 1", 1-1/2" OR 2" BACKFLOW PREVENTER ASSEMBLY
2	3	3/4", 1", 1-1/2" OR 2" x NOM. NIPPLES – BRASS
3	2	3/4", 1", 1-1/2" OR 2" x 90° ELBOWS – PVC., BRASS, OR COPPER
4	2	3/4", 1", 1-1/2" OR 2" x VARIES RISER – PVC., BRASS, OR COPPER
5	2	3/4", 1", 1-1/2" OR 2" BALL VALVE
6	*	PEA GRAVEL
7	*	PLASTIC LINER

NOTE:
- FIELD ADJUST AND CUT ITEM 4 TO THE PROPER LENGTH.
- NO GALVANIZED FITTINGS OR PIPE ALLOWED.
- A COPY OF THE ASSEMBLY CERTIFICATION SHALL BE SUBMITTED TO THE CITY'S ENGINEERING DEPARTMENT BEFORE FINAL INSPECTION.
- ASSEMBLY SHOULD HAVE ADEQUATE LANDSCAPING AROUND IT TO OBSCURE VIEW.
- ASSEMBLY SHALL BE PAINTED FOREST GREEN

STANDARD CONSTRUCTION DETAIL
REDUCED PRESSURE BACKFLOW PREVENTER (POTABLE WATER & IRRIGATION)
3/4", 1", 1 1/2", OR 2"
NTS
INDEX W-6D
MARCH 2014

OTHER PIPE	HORIZONTAL SEPARATION	CROSSINGS (1)	JOINT SPACING @ CROSSINGS (FULL JOINT CENTERED)
STORM SEWER, STORM WATER FORCE MAIN, RECLAIMED WATER (2)	WATER MAIN; 3 FT. MINIMUM	WATER MAIN; 12 INCHES IS THE MINIMUM, EXCEPT FOR STORM SEWER, THEN 6 INCHES IS THE MINIMUM AND 12 INCHES PREFERRED	WATER MAIN; ALTERNATE 3 FT. MINIMUM
VACUUM SANITARY SEWER	WATER MAIN; 10 FT. PREFERRED 3 FT. MINIMUM	WATER MAIN; 12 INCHES PREFERRED 6 INCHES MINIMUM	WATER MAIN; ALTERNATE 3 FT. MINIMUM
GRAVITY OR PRESSURE SANITARY SEWER, SANITARY FORCE MAIN, RECLAIMED WATER (4)	WATER MAIN; 10 FT. PREFERRED 6 FT. MINIMUM (3)	WATER MAIN; 12 INCHES IS THE MINIMUM, EXCEPT FOR GRAVITY SEWER, THEN 6 INCHES IS THE MINIMUM AND 12 INCHES PREFERRED	WATER MAIN; ALTERNATE 6 FT. MINIMUM
ON-SITE SEWAGE TREATMENT & DISPOSAL SYSTEM	10 FT. MINIMUM	—	—

(1) WATER MAIN SHOULD CROSS ABOVE OTHER PIPE. WHEN WATER MAIN MUST BE BELOW OTHER PIPE, THE MINIMUM SEPARATION IS 18 INCHES.
(2) RECLAIMED WATER REGULATED UNDER PART III OF CHAPTER 62-610, F.A.C.
(3) 3 FT. FOR GRAVITY SEWER WHERE BOTTOM OF THE WATER MAIN IS LAID AT LEAST 6 INCHES ABOVE THE TOP OF THE GRAVITY SANITARY SEWER.
(4) RECLAIMED WATER NOT REGULATED UNDER PART III OF CHAPTER 62-610, F.A.C.
DISCLAIMER – THIS DOCUMENT WAS PROVIDED FOR YOUR CONVENIENCE ONLY. PLEASE REFER TO F.A.C. RULE 62-555.314 FOR ADDITIONAL CONSTRUCTION REQUIREMENTS

STANDARD CONSTRUCTION DETAIL
WATER MAIN SEPARATION
NTS
INDEX W-9A
MARCH 2014

SANITARY SEWER CONSTRUCTION GENERAL NOTES

1. THE CITY'S PUBLIC UTILITY DEPARTMENT SHALL BE NOTIFIED PRIOR TO BEGINNING ANY SEWER CONSTRUCTION.
2. ALL SANITARY SEWER MAIN LINES SHALL BE A MINIMUM OF 8" IN DIAMETER. SERVICE LATERALS SHALL BE A MINIMUM OF 4" DIAMETER (RESIDENTIAL) OR A MINIMUM OF 6" DIAMETER (COMMERCIAL)
3. ALL SANITARY SEWER LINES SHALL BE PVC SDR 26. IN PLACES WHERE A MINIMUM COVER OF 4.0' CANNOT BE MAINTAINED, C-900 GREEN PVC DR-25, CLASS 100 OR CONCRETE ENCASEMENT SHALL BE USED.
4. MINIMUM ALLOWABLE SANITARY SEWER SLOPES ALLOWED ARE:
   8" PIPE 0.40%
   10" PIPE 0.30%
   12" PIPE 0.22%
5. SEWER LINE CONSTRUCTION SHALL BE ACCOMPLISHED BY THE USE OF A LASER INSTRUMENT UNLESS ANOTHER METHOD IS PREVIOUSLY APPROVED BY THE CITY.
6. THE CONTRACTOR SHALL AT ALL TIMES, DURING PIPE LAYING, DEWATER THE GROUND SUFFICIENTLY TO KEEP THE GROUNDWATER ELEVATION A MINIMUM OF 6" BELOW THE PIPE BEING LAID WITHIN THE AREA OF THE TRENCH.
7. ALL PIPES SHALL BE LAID ON A FIRM FOUNDATION. SOFT OR SPONGY BEDDING FOR PIPES WILL NOT BE ACCEPTED. ANY UNSUITABLE MATERIAL SHALL BE REMOVED AND REPLACED WITH A DRY, COMPACTED, GRANULAR MATERIAL SATISFACTORY TO THE CITY.
8. EXCAVATION AND BACKFILL: THE CONTRACTOR SHALL PROVIDE ADEQUATE SHEETING AND BRACING OF EXCAVATION WORK OR USE OF TRENCH BOX IN ORDER TO PROVIDE FOR THE SAFETY OF WORKMEN, AS WELL AS REPRESENTATIVES OF THE CITY, THE DESIGN ENGINEER, AND THE DEVELOPER.
9. THE CONTRACTOR SHALL INSTALL A METALLIZED FOIL LOCATER TAPE, OR SIMILAR DEVICE AS MAY BE APPROVED BY THE CITY FOR THE FULL LENGTH OF ALL PVC WATER, RECLAIMED WATER AND SEWAGE FORCE MAINS. THIS PIPE LOCATER AID SHALL BE INSTALLED (15) INCHES BELOW FINISHED GRADE OR AS DIRECTED BY THE MANUFACTURER AND IS IN ADDITION TO THE LOCATER WIRE REQUIRED IN THE UTILITY PIPE LOCATION MATERIALS DETAIL (MISCELLANEOUS DETAILS SECTION – M10).
10. MANHOLES SHALL BE LOCATED AT INTERVALS NOT EXCEEDING 400 FEET.
11. MANHOLE RIMS SHALL MATCH FLUSH WITH THE FINISH GRADE ELEVATION IN PAVED AREAS AND A MINIMUM OF 0.2 FEET ABOVE GRADE IN UNPAVED AREAS.

STANDARD CONSTRUCTION DETAIL
GENERAL NOTES
SANITARY SEWER CONSTRUCTION
INDEX S-1A
MARCH 2014

SANITARY SEWER CONSTRUCTION GENERAL NOTES

12. THE CONTRACTOR SHALL CONSTRUCT SANITARY SEWER MANHOLES IN SUCH A WAY THAT SEWER LINES DO NOT INTERSECT SEALED JOINTS BETWEEN SECTIONS OF THE MANHOLE.
13. RUBBER BOOTS AND STAINLESS STEEL BANDS SHALL BE UTILIZED IN THE CONNECTION OF THE SEWER MAIN TO THE MANHOLES (SEE RUBBER BOOT AND PRECAST JOINT CONNECTION DETAIL).
14. NO DOGHOUSE TYPE MANHOLES ARE PERMITTED WITHIN THE CITY OF ORMOND BEACH
15. INDIVIDUAL SANITARY SERVICE CONNECTORS ON NEW CONSTRUCTION SHALL NOT BE CONNECTED DIRECTLY INTO MANHOLES, BUT TO SEWER MAIN LINES BY USE OF WYE CONNECTIONS.
16. FOR SINGLE FAMILY HOMES, SINGLE FOUR INCH SEWER SERVICES SHALL BE CONSTRUCTED AT EACH LOT OR UNIT AND LOCATED ON THE DOWNSTREAM SIDE OF THE LOT CENTER LINE. THESE SERVICES SHALL BE EXTENDED 4 FEET ABOVE GROUND AT THE PROPERTY LINE WITH A PVC RISER AND PLUG BEING EASILY VISIBLE FROM THE ROAD. RUBBER SEAL FITTINGS TO BE USED ON ALL LINES, NO GLUED JOINTS.
17. FOR MULTI-FAMILY AND COMMERCIAL SITES, SIX INCH MINIMUM SEWER SERVICES AND CLEANOUTS SHALL BE PROVIDED AS APPROVED BY THE CITY.
18. SANITARY SEWER LATERALS LONGER THAN 70 FEET, MEASURED FROM THE SEWER MAIN TO THE RIGHT-OF-WAY LINE MAY BE APPROVED ON A CASE BY CASE BASIS. SUCH LATERALS SHALL BE D.I.P. EPOXY LINED OR C-900 PVC.
19. SANITARY SEWER MANHOLES WHICH HAVE SEWER FORCE MAINS DISCHARGING DIRECTLY INTO THEM, OR ANY MANHOLE WITHIN 200 FEET OF A LIFT STATION, SHALL BE FIBERGLASS OR PVC LINED. RETRO-FITTING OF MANHOLES WITH LINERS SHALL BE REQUIRED WHEN NEW CONNECTIONS SUCH AS THIS ARE MADE. FIBERGLASS SHALL BE A MINIMUM 1/2" THICKNESS UNLESS APPROVED OTHERWISE BY THE CITY. LINING SHALL BE AGRU SURE-GRIP OR PRE-APPROVED EQUAL.
20. SEE CHART ON DETAIL INDEX S-1C FOR FORCE MAIN AND REUSE PIPE SIZE AND MATERIALS.
21. THE CITY OF ORMOND BEACH REQUIRES THE DEVELOPER TO TELEVISE ANY AND ALL SANITARY SEWER MAIN LINES AND LATERALS PRIOR TO ANY FINAL ACCEPTANCE, AND RESERVES THE RIGHT TO REQUEST WATER AND AIR TESTING.
22. ALL SEWER MAINS PRIOR TO ACCEPTANCE BY THE CITY SHALL BE TELEVISED BY A REPUTABLE COMPANY THAT ENGAGES IN THIS TYPE OF WORK. THE DVD SHALL BE NON-STOP WITH AUDIO DESCRIBING WHAT IS BEING REVIEWED. WRITTEN DVD LOGS DESCRIBING THE CONDITION OF THE LINES SHALL ACCOMPANY THE DVD SUBMISSION TO THE CITY.
23. CONTRACTORS SHALL BE REQUIRED TO TELEVISE ALL SEWER LINES IN THE PRESENCE OF CITY PERSONNEL AND PROVIDE COPIES OF THE DVD TO THE PUBLIC UTILITY DEPT. ANY DEFECTS NOTED SHALL BE CORRECTED PRIOR TO ACCEPTANCE BY THE CITY.

STANDARD CONSTRUCTION DETAIL
GENERAL NOTES
SANITARY SEWER CONSTRUCTION
INDEX S-1B
MARCH 2014

SANITARY SEWER CONSTRUCTION GENERAL NOTES

24. ALL MANHOLES CONSTRUCTED IN SIDE YARDS, BACKYARDS, AND EASEMENTS OFF THE RIGHT-OF-WAY SHALL BE OUTFITTED WITH FIBERGLASS LINERS OR OTHER TYPES OF LINERS OR COATINGS APPROVED BY THE CITY. IN ADDITION THE CITY MAY REQUIRE LINERS OR COATINGS TO BE INSTALLED IN OTHER AREAS WHERE THE PUBLIC UTILITY DEPARTMENTS BELIEVE THE NEED IS JUSTIFIED.
25. ALL SEWER LINES WHICH ARE CONSTRUCTED OFF PUBLIC RIGHTS-OF-WAY WITHIN SIDEYARDS, BACKYARDS, AND OTHER POORLY ACCESSIBLE AREAS SHALL BE CONSTRUCTED OF C-900 PVC, OR EPOXY LINED DUCTILE IRON PIPE. ABSOLUTELY NO USE OF PLASTIC STYRENE FITTINGS SHALL BE ALLOWED.
26. SEWER LATERAL LOCATIONS SHALL BE MARKED ALONG THE OUTSIDE OF THE CURB WITH A SAW CUT V OR BY A METAL TAB SET INTO THE PAVEMENT.
27. EZ-WRAP PLASTIC, AS MANUFACTURED BY PRESS-SEAL GASKET CORPORATION OR APPROVED EQUAL, SHALL BE USED ON THE OUTSIDE OF ALL MANHOLE AND WET WELL JOINTS. APPLY ONE LAYER OF 9" WRAP CENTERED ON EACH JOINT. A CITY INSPECTOR SHALL PERSONALLY INSPECT ALL JOINT SEALS PRIOR TO BACKFILLING OPERATIONS .
28. ALL PROPOSED SEWER MAINS, 4" OR GREATER, SHALL BE FLUSHED AND CLEANED WITH A POLY PIG IN ACCORDANCE WITH LATEST AWWA STANDARDS AND THE FLORIDA DEPARTMENT OF ENVIRONMENTAL PROTECTION REQUIREMENTS.
29. ALL SEWER MAINS SHALL HAVE A MINIMUM COVER OF 36 INCHES. IN SPECIAL CASES WHERE IT IS IMPOSSIBLE OR INAPPROPRIATE TO PROVIDE ADEQUATE COVER, DUCTILE IRON CLASS 350 OR CONCRETE ENCASEMENT MAY BE USED AS APPROVED BY THE CITY.
30. SEWER SYSTEMS SHALL BE PRESSURE TESTED AT 100 PSI STATIC PRESSURE FOR A PERIOD OF 2 HOURS PER AWWA STANDARDS. TESTS SHALL BE CONDUCTED BEFORE FINAL PAVING AND IN THE PRESENCE OF THE CITY'S INSPECTOR.

FORCE MAIN & REUSE MAIN STANDARDS		
DIAMETER	MATERIAL	STANDARD
2" - 4"	PVC 1120 / SDR 21	ASTM D 2241
> 4" - 12"	PVC 1120 / CLASS 100	AWWA C 900
14" - 36" (16"- 24" —— DR - 18) (30"- 36" —— DR - 21)	PVC 1120	AWWA C 905
ALL SIZES	HDPE (DIPS) DR 13.5	ASTM F 714

NOTE: PVC PIPE COLOR SHALL BE GREEN OR WHITE FOR SEWER FORCE MAIN, AND PURPLE FOR REUSE MAIN.

STANDARD CONSTRUCTION DETAIL
GENERAL NOTES
SANITARY SEWER CONSTRUCTION
INDEX S-1C
MARCH 2014

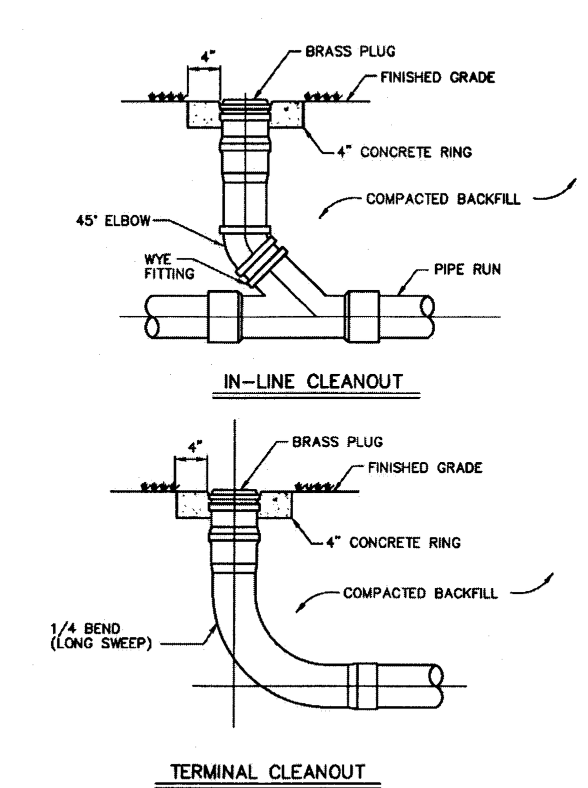

NOTE: CONCRETE COLLAR REQUIRED IN UNPAVED AREAS

STANDARD CONSTRUCTION DETAIL
CLEANOUT DETAIL
NTS.
INDEX S-7
MARCH 2014

1. CONSTRUCTION STANDARDS FOR ALL DRAINAGE SYSTEM COMPONENTS SHALL CONFORM TO THE LATEST EDITION OF THE "FDOT STANDARD SPECIFICATIONS FOR ROAD AND BRIDGE CONSTRUCTION" AND AS SPECIFIED HEREIN.
2. ALL STORM WATER PIPES AND STRUCTURES SHALL BE INSTALLED ON A FIRM FOUNDATION WITH ALL UNSUITABLE MATERIAL (MUCK, ROCK, COQUINA, ETC.) REMOVED AND REPLACED WITH CLEAN GRANULAR MATERIAL.
3. DEWATERING SHALL BE PROVIDED TO KEEP GROUNDWATER ELEVATION A MINIMUM OF 6 INCHES BELOW THE COMPONENT BEING INSTALLED.
4. ALL PIPES AND STRUCTURES SHALL BE PLACED TRUE TO LINES AND GRADES AS DEPICTED ON THE APPROVED PLANS.
5. ALL PIPE JOINTS SHALL BE PROPERLY HONED AND FILTER FABRIC LINED USING A METHOD TO HOLD THE FABRIC IN PLACE DURING BACKFILL.
6. BACKFILL AND COMPACT TO THE SPRING-LINE (CENTER OF PIPE) ELEVATION AND REQUEST CITY INSPECTION AND APPROVAL BEFORE CONTINUING.
7. ALL WORK COVERED WITHOUT CITY INSPECTION WILL BE REQUIRED TO BE EXCAVATED AND INSPECTED AT THE CONTRACTOR'S EXPENSE.
8. TRENCHES SHALL BE BACKFILLED AND COMPACTED WITH CLEAN GRANULAR MATERIAL IN MAX 6" LIFTS WITH A MINIMUM COMPACTION OF 98 PERCENT (AASHTO-T180) IN PAVED AREAS AND 95 PERCENT (AASHTO-T180) IN UNPAVED AREAS.
9. IT SHALL BE THE CONTRACTOR'S RESPONSIBILITY TO ENSURE THAT TRENCH COMPACTION TESTS AT POINTS 1' ABOVE THE PIPE AND AT A MAX. 1' VERTICAL INTERVALS TO FINISH GRADE, AT A MAXIMUM SPACING OF 100 FEET, AND TO FURNISH COPIES OF TEST REPORTS PROMPTLY TO THE CITY'S INSPECTOR.
10. ALL STORM SEWER PIPE SHALL BE REINFORCED CONCRETE (RCP), HIGH DENSITY POLYETHYLENE (HDPE), POLYVINYL CHLORIDE (PVC) OR ALUMINUM CORRUGATED METAL PIPE (ACMP), AS SHOWN ON THE PLANS.
11. STORM DRAINAGE PIPES WITHIN PUBLIC RIGHT-OF-WAY SHALL BE A MINIMUM OF FIFTEEN (15) INCH RCP DIAMETER OR EQUIVALENT.
12. STORM INLETS, MANHOLES, AND CATCH BASINS SHALL BE EITHER POURED IN PLACE OR PRECAST REINFORCED CONCRETE. STRUCTURES SHALL BE REQUIRED AT EACH CHANGE OF PIPE SIZE OR CHANGE IN PIPE DIRECTION.

STANDARD CONSTRUCTION DETAIL
STORM DRAINAGE
CONSTRUCTION NOTES
INDEX ST-1A
MARCH 2014

13. STORM INLETS SHALL BE SPACED IN SUCH A MANNER AS TO ACCEPT ONE HUNDRED (100) PERCENT OF THE DESIGN STORM RUNOFF.
14. WET DETENTION PONDS SHALL BE EIGHT (8) FEET MINIMUM TO TWELVE (12) FEET MAXIMUM DEPTH BELOW THE DESIGN LOW OR NORMAL WATER STAGE.
15. MAXIMUM DISTANCES BETWEEN INLETS AND/OR JUNCTION BOXES:

PIPES SIZE (INCHES)	LENGTH OF RUN (FEET)
15	150
18	300
24 OR GREATER	400

16. ALL SWALES, DITCHES, AND DRY RETENTION POND SIDE SLOPES SHALL BE NO STEEPER THAT 4:1 (H:V) AND SHALL BE SODDED.
17. ALL RETENTION POND BACKSLOPES SHALL BE NO STEEPER THAN 3:1 (H:V) AND SHALL BE SODDED.
18. NORMAL ROADSIDE SWALES SHALL BE CONSTRUCTED TO A MAXIMUM DEPTH OF 18" BELOW THE OUTSIDE EDGE OF PAVEMENT OR CONCRETE CURB.
19. CONCRETE EROSION CONTROL MUST BE PROVIDED WHERE SWALES OR CULVERTS INTERCEPT DRAINAGE DITCHES.
20. A MINIMUM ONE FOOT (1') FREEBOARD ABOVE THE DESIGN HIGH WATER ELEVATION IS REQUIRED AT ALL POINTS AROUND WET RETENTION PONDS.
21. A MINIMUM SIX INCH (6") FREEBOARD ABOVE THE DESIGN HIGH WATER ELEVATION IS REQUIRED AT ALL POINTS AROUND DRY RETENTION PONDS.
22. POND INFLOW SHALL GENERALLY BE CONSTRUCTED WITH REINFORCED CONCRETE AND SHALL BE SUBJECT TO THE APPROVAL OF THE CITY.
23. OUTLET STRUCTURES ARE REQUIRED ON ALL PONDS. ALL OUTLET STRUCTURES SHALL BE PERMANENT CONCRETE OVERFLOW WEIRS OR CONCRETE OUTLET CONTROL STRUCTURES. NO SODDED WEIRS OR OTHER NON-PERMANENT OVERFLOW STRUCTURES SHALL BE ALLOWED.
24. SOIL EROSION CONTROL MEASURES SATISFACTORY TO THE CITY, SHALL BE EMPLOYED DURING CONSTRUCTION AND UPON COMPLETION OF THE POND.
25. THE CITY MAY REQUEST THAT THE DEVELOPER SUBMIT A REPORT BY A QUALIFIED HYDROLOGIST ON THE IMPACT THE POND WILL HAVE ON NEIGHBORING WATER TABLE ELEVATIONS BOTH DURING CONSTRUCTION AND AFTER POND COMPLETION. THE CITY MAY REQUIRE GROUNDWATER MONITORING DURING THE POND EXCAVATION.

STANDARD CONSTRUCTION DETAIL
STORM DRAINAGE
CONSTRUCTION NOTES
INDEX ST-1B
MARCH 2014

26. ADEQUATE MAINTENANCE ACCESS AS APPROVED BY THE CITY SHALL BE PROVIDED AROUND THE ENTIRE PERIMETER OF ALL PONDS AND ASSOCIATED OUTFALLS DISCHARGING INTO AND OUT OF PONDS.
27. IN GENERAL, ALL RETENTION/DETENTION PONDS MUST BE CONSTRUCTED PRIOR TO ANY ROAD, PARKING LOT, OR BUILDING CONSTRUCTION COMMENCING OR AS CURRENT PERMIT CONDITIONS DICTATE.
28. THE CONTRACTOR SHALL BE RESPONSIBLE TO OBTAIN ANY DEWATERING PERMITS THAT MAY BE REQUIRED.
29. CULVERTS CROSSING RIGHT-OF-WAYS SHALL EXTEND FROM RIGHT-OF-WAY LINE TO RIGHT-OF-WAY LINE UNDER THE ROADWAY.
30. ALL STORM WATER DISCHARGE FROM RETENTION/DETENTION PONDS ARE REQUIRED TO BE CHANNELED INTO DEFINED DRAINAGE PATHS TO EXISTING WATER BODIES, WETLANDS, DITCHES, ETC.
31. THE CITY OF ORMOND BEACH REQUIRES THE DEVELOPER TO TELEVISE ANY AND ALL STORM SEWER PIPE SYSTEMS IN THE PRESENCE OF THE CITY INSPECTOR BY A REPUTABLE COMPANY THAT ENGAGES IN THIS TYPE OF WORK. THE DVD SHALL BE IN HIGH QUALITY STANDARD RESOLUTION USING A CAMERA WITH SUITABLE LIGHTING TO ALLOW A CLEAR FOCUSED PICTURE OF THE ENTIRE INSIDE PIPE CIRCUMFERENCE. THE DVD SHALL BE NON-STOP WITH AUDIO DESCRIBING WHAT IS BEING VIEWED. COPIES OF DVD SHALL BE SUBMITTED IN DVD FORMAT ACCOMPANIED BY WRITTEN LOGS DESCRIBING THE CONDITION OF THE LINES AT LEAST FORTY-EIGHT (48) HOURS PRIOR TO REQUESTING FINAL INSPECTIONS. ANY DEFECTS NOTED SHALL BE CORRECTED PRIOR TO ACCEPTANCE BY THE CITY OR ISSUANCE OF CERTIFICATE OF OCCUPANCY.

STANDARD CONSTRUCTION DETAIL
STORM DRAINAGE
CONSTRUCTION NOTES
INDEX ST-1C
MARCH 2014

City of Ormond Beach
FINAL APPROVAL
Site Plan Review Committee

NO.	DATE	APPR.	REVISIONS

JUN 0 1 2015
MARK STEVEN DOWST LICENSE No 35503 STATE OF FLORIDA PROFESSIONAL ENGINEER

MARK DOWST & ASSOCIATES, INC.
ENGINEERS * PLANNERS * SURVEYORS
EB 4335 LB 4335
536 N. HALIFAX AVENUE, SUITE # 100 * DAYTONA BEACH, FLORIDA 32118 * (386) 258-7999

SCALE	DESIGNED	DRAWN	CHECKED	DATE
N.T.S.	MSD	CAD	MSD	02-20-15
			BY	DATE

ORMOND BEACH CITY DETAILS
ENVIRONMENTAL LEARNING CENTER
ORMOND BEACH, FLORIDA

PROJECT NO. 1251
C9
1251-CITYDET

ES BMP 1.01

TEMPORARY GRAVEL CONSTRUCTION ENTRANCE

DEFINITION

A STONE STABILIZED PAD LOCATED AT POINTS OF VEHICULAR INGRESS AND EGRESS ON A CONSTRUCTION SITE.

PURPOSE

TO REDUCE THE AMOUNT OF SEDIMENT TRANSPORTED ONTO PUBLIC ROADS BY MOTOR VEHICLES OR RUNOFF.

CONDITIONS WHERE PRACTICE APPLIES

WHEREVER TRAFFIC WILL BE LEAVING A CONSTRUCTION SITE AND MOVES DIRECTLY ONTO A PUBLIC ROAD OR OTHER PAVED AREA.

PLANNING CONSIDERATIONS

CONSTRUCTION ENTRANCES SHOULD BE USED WHERE MUD CAN BE TRACKED ONTO PAVED SURFACES AND WHERE SOILS BEFORE THE ENTRY A PUBLIC ROAD. IF THE ACTION OF THE VEHICLE TRAVELING OVER SITE GRAVEL PAD IS NOT SUFFICIENT TO REMOVE THE MAJORITY OF THE MUD, THE TIRES OF THE VEHICLE MUST BE WASHED BEFORE ENTRY ONTO A PUBLIC ROAD. IF WASHING IS USED, PROVISIONS MUST BE MADE TO INTERCEPT THE WASH WATER AND TRAP THE SEDIMENT BEFORE IT IS DISCHARGED INTO A STORM DRAIN, DITCH OR WATERCOURSE. USE IN CONJUNCTION WITH MUD STABILIZATION OF CONSTRUCTION ROADS TO REDUCE THE AMOUNT OF MUD PICKED UP BY CONSTRUCTION VEHICLES.

DESIGN CRITERIA

AGGREGATE SIZE

FDOT AGGREGATE NO. 1 (1.5 - 3.5 INCH STONE) SHOULD BE USED.

ENTRANCE DIMENSIONS

AGGREGATE LAYER MUST BE AT LEAST 6 INCHES THICK. IT MUST EXTEND THE FULL WIDTH OF THE VEHICULAR SURFACE AND A MINIMUM OF 50 FEET LENGTH OF THE ENTRANCE MUST BE AT LEAST 50 FEET (SEE DETAIL).

WASHING

IF CONDITIONS OF THE SITE ARE SUCH THAT THE MAJORITY OF THE MUD IS NOT REMOVED BY THE VEHICLES TRAVELING OVER THE GRAVEL PAD, THE TIRES MUST BE WASHED BEFORE ENTRY ONTO PAVED AREA OF A PUBLIC ROAD. WASH WATER MUST BE CARRIED AWAY FROM THE ENTRANCE TO A SETTLING AREA TO REMOVE SEDIMENT. A WASH RACK MAY BE USED TO CONFINE AND MAKE WASHING MORE CONVENIENT AND EFFECTIVE. SEE DETAIL.

LOCATION

THE ENTRANCE SHOULD BE LOCATED TO PROVIDE FOR MAXIMUM UTILITY BY ALL CONSTRUCTION VEHICLES.

INDICATE PROPOSED LOCATION OF GRAVEL CONSTRUCTION ENTRANCE ON THE GRADING PLAN.

CONSTRUCTION SPECIFICATIONS

THE AREA OF THE ENTRANCE SHOULD BE CLEARED OF ALL VEGETATION, ROOTS AND OTHER OBJECTIONABLE MATERIAL. CLEARED AREA SHALL BE PLACED TO THE SPECIFIED DIMENSIONS. WET DRAINAGE FACILITIES REQUIRED BECAUSE OF WASHING ENTRANCE MUST BE CONSTRUCTED ACCORDING TO THE SPECIFICATIONS. IF A WASH RACK IS USED, IT MUST BE CONSTRUCTED ACCORDING TO SPECIFICATIONS. IF WASH RACKS ARE TO MANUFACTURER'S SPECIFICATIONS.

MAINTENANCE

THE ENTRANCE SHALL BE MAINTAINED IN A CONDITION WHICH WILL PREVENT TRACKING OR FLOW OF MUD ONTO PUBLIC RIGHTS-OF-WAY. THIS MAY REQUIRE PERIODIC TOP DRESSING WITH 2-INCH STONE, AS CONDITIONS DEMAND, REPAIR AND/OR CLEANING OF ANY DIVERSION DEVICES, AND REMOVAL OF MUD WHICH HAS BEEN DEPOSITED OR WASHED OR TRACKED FROM VEHICLES ONTO PAVEMENTS OR INTO STORM DRAINS MUST BE REMOVED IMMEDIATELY.

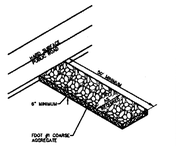

GRAVEL CONSTRUCTION ENTRANCE
N.T.S.

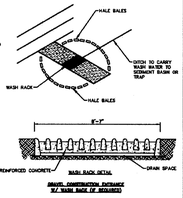

GRAVEL CONSTRUCTION ENTRANCE
W/ WASH RACK (IF REQUIRED)

MODEL COMPLY WITH FDOT REQUIREMENTS FOR 905, CONSTRUCTION ENTRANCE PER FDOT ROADWAY INDEX (INDEX NO. 106)

	STANDARD CONSTRUCTION DETAIL TEMPORARY GRAVEL CONSTRUCTION ENTRANCE NTS	INDEX M-13 MARCH 2014

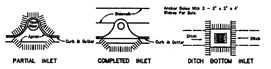

PROTECTION AROUND INLETS OR SIMILAR STRUCTURES
NOTE: SUBSTITUTE ROCK BAGS AT PAVED SURFACES

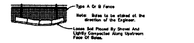

BALES BACKED BY FENCE

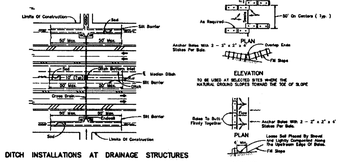

DITCH INSTALLATIONS AT DRAINAGE STRUCTURES

BARRIERS FOR FILL SLOPES

	STANDARD CONSTRUCTION DETAIL EROSION CONTROL - SYNTHETIC BALES NTS	INDEX M-14A MARCH 2014

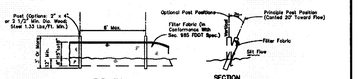

Note: Silt Fence to be paid for under the contract unit price for Staked Silt Fence (LF).

TYPE III SILT FENCE

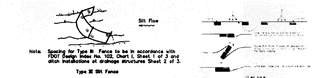

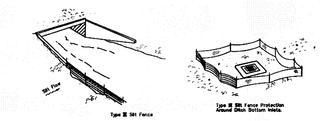

Do not deploy in a manner that silt fences will act as a dam across permanent flowing watercourses. Silt fences are to be used at upland locations and turbidity barriers used at permanent bodies of water.

SILT FENCE APPLICATIONS

	STANDARD CONSTRUCTION DETAIL EROSION CONTROL - SILT FENCE NTS	INDEX M-15 MACH 2014

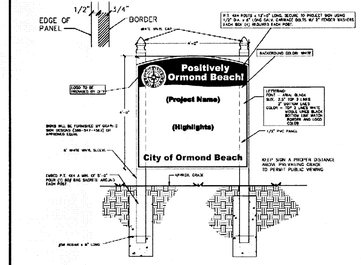

PROJECT NAME: _____

HIGHLIGHTS: _____

	STANDARD CONSTRUCTION DETAIL CIP CONSTRUCTION SIGN NTS.	INDEX M-20 MARCH 2014

City of Ormond Beach
FINAL APPROVAL
Site Plan Review Committee

NO.	DATE	APPR.	REVISION

JUN 01 2015
STEVEN DOWST LICENSE NO. 56555
STATE OF FLORIDA
PROFESSIONAL ENGINEER

MARK DOWST & ASSOCIATES, INC.
ENGINEERS * PLANNERS * SURVEYORS
EB 4335 LB 4335
536 N. HALIFAX AVENUE, SUITE # 100 • DAYTONA BEACH, FLORIDA 32118 * (386) 258-7999

SCALE	DESIGNED	DRAWN	CHECKED	DATE
N.T.S.	MSD	CAD	MSD	02-20-15
				BY

ORMOND BEACH CITY DETAILS

ENVIRONMENTAL LEARNING CENTER

ORMOND BEACH, FLORIDA

PROJECT NO. 1251 C10

1251-CITYDET

SECTION 41, TOWNSHIP 14 SOUTH, RANGE 32 EAST
ORMOND BEACH, VOLUSIA COUNTY, FLORIDA

City of Ormond Beach
FINAL APPROVAL
Site Plan Review Committee

GRAPHIC SCALE

0 15 30 60 90

SCALE: 1" = 30'

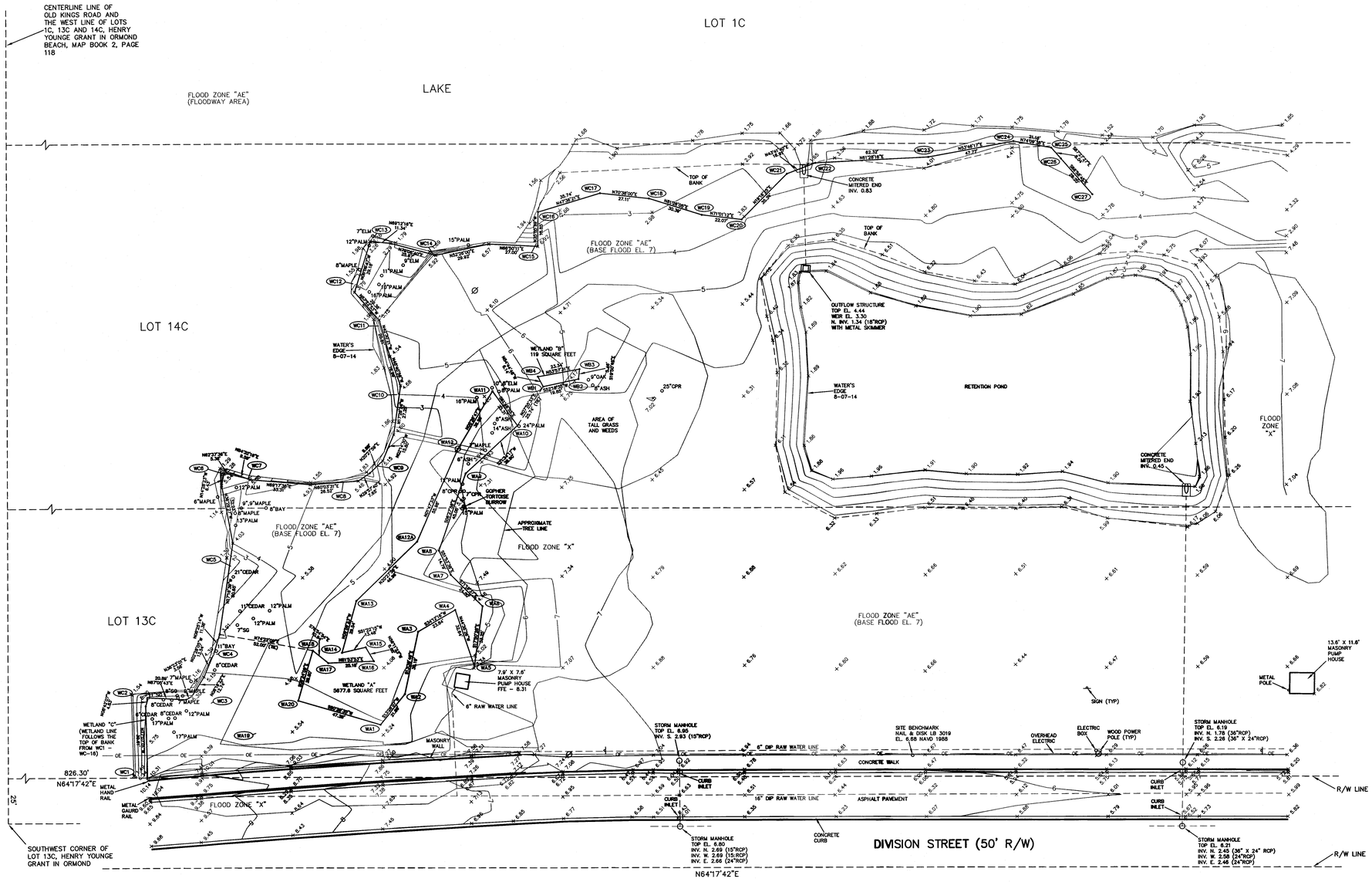

SURVEYOR'S NOTES

1. BEARING STRUCTURE BASED ON THE FLORIDA STATE PLANE COORDINATE GRID, NAD 1983, EAST ZONE, SOUTH RIGHT OF WAY LINE OF DIVISION STREET.
2. DIMENSIONS ARE IN FEET AND DECIMALS THEREOF.
3. ELEVATIONS REFER TO NAVD 1988, AND ARE IN FEET. CONVERSION FACTOR IS "NAVD 1988 PLUS 1.14 FEET EQUALS NGVD 1929 DATUM".
4. UNDERGROUND FOUNDATIONS OR UTILITIES, IF ANY, NOT LOCATED.
5. FLOOD ZONES ARE "X" (AREAS OUTSIDE OF 0.2% FLOOD CHANCE), "X" (AREAS OF 0.2% FLOOD CHANCE) AND "AE" (BASE FLOOD ELEVATION 7), AS SCALED FROM FLOOD INSURANCE RATE MAP 12127C0214J, MAP REVISED FEBRUARY 19, 2014.
6. WETLANDS WERE FLAGGED BY ENVIRONMENTAL SERVICES, INC, AND APPROVED BY REPRESENTATIVES OF THE ST. JOHNS RIVER WATER MANAGEMENT DISTRICT ON AUGUST 25, 2014.
7. WATER LINES SHOWN ARE APPROXIMATE, BASED ON A DRAWING PROVIDED BY THE CITY OF ORMOND BEACH.
8. TREE LEGEND:
   CPR = CAMPHOR
   SG = SWEET GUM
9. REVISED WETLAND "A" TO CONNECT WA18 TO WA20, DELETING WA19, PER ENVIRONMENTAL SERVICES, INC., DATED SEPTEMBER 18, 2014.
10. REMOVED 6" POTABLE WATER LINE PER THE CITY OF ORMOND BEACH COMMENTS, MAY 21, 2015.

LEGEND

℄ = CENTERLINE +00.00 = EXISTING ELEVATION ● = 5/8" IRON ROD WITH CAP ▲ = PERMANENT CONTROL POINT ■ = 4" X 4" CONCRETE MONUMENT ○ = NAIL WITH CAP △ OR D = CENTRAL ANGLE A/C = AIR CONDITIONER BK. = BOOK C.M. = CONCRETE MONUMENT	(C) = CALCULATED CMP = CORRUGATED METAL PIPE C.R. = COUNTY ROAD C = CHORD CB = CHORD BEARING CONC. = CONCRETE COR. = CORNER ( ) = DEED OR RECORD DATA (DESC) = DATA PER DESCRIPTION EL. = ELEVATION	ELEC. = ELECTRICAL ESMT. = EASEMENT F.H. = FIRE HYDRANT F.S. = FLORIDA STATUTES F.D.O.T. = FLORIDA DEPARTMENT OF TRANSPORTATION FFE = FINISHED FLOOR ELEVATION F.A.C. = FLORIDA ADMINISTRATIVE CODE FD. = FOUND GOV'T = GOVERNMENT	I.P. = IRON PIPE I.R. = IRON ROD INV. = INVERT L = ARC LENGTH LB = LAND SURVEYOR BUSINESS L.S. = LAND SURVEYOR M.B. = MAP BOOK MAS. = MASONRY N & W = NAIL AND WASHER NO. = NUMBER	N.G.V.D. = NATIONAL GEODETIC VERTICAL DATUM (NTS) = NOT TO SCALE (NR) = NON-RADIAL OE = OVERHEAD ELECTRIC O.R. = OFFICIAL RECORDS (P) = PLAT DATA PED. = PEDESTAL P.O.B. = POINT OF BEGINNING PT = POINT OF TANGENCY	PCC = POINT OF COMPOUND CURVATURE POC = POINT ON CURVE PG. = PAGE P.R.M. = PERMANENT REFERENCE MONUMENT P.C.P. = PERMANENT CONTROL POINT PRC = POINT OF REVERSE CURVATURE	PC = POINT OF CURVATURE P.L.S. = PROFESSIONAL LAND SURVEYOR P.B. = PLAT BOOK RES. = RESIDENCE R/W = RIGHT OF WAY (R) = RADIAL RNG. = RANGE R = RADIUS RCP = REINFORCED CONCRETE PIPE SAN. = SANITARY	SUB. = SUBDIVISION S.R. = STATE ROAD SEC. = SECTION TEL. = TELEPHONE TWP. = TOWNSHIP T = TANGENT TRANS. = TRANSFORMER T.V. = TELEVISION U.S. = UNITED STATES W.V. = WATER VALVE

THIS SURVEY DRAWING IS THE PROFESSIONAL OPINION OF THIS SURVEYOR AND FIRM WHICH WAS PREPARED UTILIZING THE BEST AVAILABLE INFORMATION AND AS SUCH DOES NOT CONSTITUTE A GUARANTEE OR WARRANTY, EITHER EXPRESSED OR IMPLIED. FURTHERMORE, THIS SURVEYOR AND FIRM DOES NOT ASSUME RESPONSIBILITY AND SHALL NOT BE HELD LIABLE FOR CLAIMS ARISING FROM ERRONEOUS OR INCORRECT INFORMATION FURNISHED TO THE SURVEYOR, WHICH WAS USED AS A BASIS IN THE PREPARATION OF THIS SURVEY DRAWING.

VALID WITH SIGNATURE & EMBOSSED SEAL ONLY

I HEREBY CERTIFY THAT THIS PLAT MEETS THE STANDARDS OF PRACTICE SET FORTH BY THE FLORIDA BOARD OF PROFESSIONAL SURVEYORS AND MAPPERS IN CHAPTER 5J-17.050, F.A.C., PURSUANT TO SECTION 472.027, FLORIDA STATUTES.

KENNETH R. JONES, P.L.S. NO. 4914 KJONES@MDAENG.COM

MARK DOWST & ASSOCIATES, INC.
* ENGINEERS PLANNERS SURVEYORS LB#4335 *
536 NORTH HALIFAX AVENUE, SUITE 100, DAYTONA BEACH, FLORIDA 32118 386-258-7999

SPECIFIC PURPOSE SURVEY — SCALE: 1"=30'

FIELD BOOK: 159 — PAGE(S): 39 — DC FILE:

DRAWN BY: KJ — CREW: S/C/D — CHECKED BY: KJ — DRAW DATE: 5-21-15 — FIELD DATE: 9-03-14

PROJECT NO. 1251

FILE: 1251SVY3

SHEET 1 OF 1

PROPOSED ELC BUILDING

APPROX. WATER'S EDGE

APPROX. WATER'S EDGE

TOP OF BANK

WETLAND LINE

8' X 8' ENCLOSURE WITH 42" GATE

TREE BARRICADE (TYP.) (SEE SHEET LA-2 FOR DETAIL)

10' x 10' SHED

12'x18' CANOE LAUNCH FLOATING DOCK & RAMP

DWF. YAUPON HOLLY - COONTIE

BLUE FLAG IRIS

FIREBUSH - FAKAHATCHEE GRASS - FLA. FLAME AZALEA

PROPOSED BUILDING

WAX MYRTLE SIMPSON STOPPER - WALTER'S VIBURNUM

FAKAHATCHEE GRASS MUHLY GRASS - FIREBUSH

7"ELM

12"PALM

15"PALM

8"MAPLE

9"ELM

17"PALM

10"PALM

16"PALM

NATURAL GROUND COVER

CANOE RACK (Holds 6 Canoes)

NATURAL GROUND COVER

BLUEBERRY BUSH

FIREBUSH SAW PALMETTO - PORTERWEED

WAX MYRTLE CEDAR TREES - ROBIN HOLLY

BLUE EYED GRASS

PAUROTIS PALM

LIVE OAK - CHESTNUT OAK

NATIVE WILD PETUNIA

APPROX. WATER'S EDGE 8-07-14 Elev. 1.29

WETLAND LINE

NO TREE BARRICADE SHOWN DUE TO NO DEVELOPMENT IMPACT

12"PALM

6"MAPLE

9",9"MAPLE

8"BAY

8"MAPLE

13"PALM

15"PALM

NATURAL GROUND COVER

APPROXIMATE TREE LINE

WETLAND LINE

21"CEDAR

APPROX. WATER'S EDGE

11"CEDAR

12"PALM

12"PALM

7"SWEET GUM

11"BAY

8"CEDAR

7"MAPLE

SWEET GUM

8"MAPLE

GUM

7"MAPLE

8"CEDAR

CEDAR

8"CEDAR

12"PALM

17"PALM

17"PALM

WETLAND LINE

7.9' X 7.6' EXISTING MASONRY PUMP HOUSE FFE = 8.31

EXISTING MASONRY WALL

EXISTING CONCRETE WALK

DIVISION AVENUE (50' R/W)

N64°17'42"E

18"ELM

18"PALM

16"PALM

8"ASH

14"ASH

24"PALM

7"MAPLE

6"ASH

12"PALM

TREE BARRICADE (TYP.)

WEEPING YAUPON HOLLY

PURPLE LOVEGRASS

BLAZING STAR

CABBAGE PALMS

FAKAHATCHEE GRASS

MUHLY GRASS - FIREBUSH

SWEETBAY MAGNOLIA

ROBIN HOLLY - AMERICAN HOLLY

DWF. YAUPON HOLLY

DWF. WALTER'S VIBURNUM - COONTIE

BLUE EYED GRASS

CABBAGE PALMS - PAUROTIS PALM

FAKAHATCHEE GRASS - MUHLY GRASS

BUS DROP OFF

PINELAND DROPSEED

DWF. YAUPON HOLLY - DWF. BLUESTEM SAW PALMETTO

MONUMENT SIGN

ROBIN HOLLY - AMERICAN HOLLY

RED SHUMARD OAK - TURKEY OAK

VEGETATED SWALE: OUTER EDGE w/BOSTON FERN, DWF. FAKAHATCHEE GRASS - SWALE BOTTOM w/BLUE FLAG IRIS, RAIN LILY

EXISTING CONCRETE CURB

PINELAND LANTANA BLUE EYED GRASS - SUNSHINE MIMOSA

COONTIE - PURPLE LOVEGRASS

16" DIP RAW WATER LINE

EXISTING ASPHALT PAVEMENT

EXISTING CONCRETE WALK

6" DIP RAW WATER LINE

EXISTING SIGN (TYP)

EXISTING METALPOLE

TOP OF BANK

POND CYPRESS - BALD CYPRESS

RIVER BIRCH

WATER'S EDGE 8-07-14

EXISTING RETENTION POND

RIVER BIRCH

AQUATIC PLANTS ALONG WATERLINE:
- PICKERELWEED
- ARROWHEAD DUCK POTATO
- FIRE FLAG
- CANNA
- BLUE FLAG IRIS
- SOFT RUSH

COASTAL PLAIN WILLOW

City of Ormond Beach FINAL APPROVAL Site Plan Review Committee

IRRIGATION INTENT:

- ALL PROPOSED TREES ALONG EXISTING POND WILL BE IRRIGATED WITH (1) BUBBLER PER TREE. ENLARGED POND WILL BE SODDED WITH BAHIA AND ESTABLISHED WITH A WATER ESTABLISHMENT PERIOD.
- ALL PROPOSED PLANTING AREAS AROUND BUILDING, PARKING AND ALONG WALKWAYS WILL BE IRRIGATED WITH DRIP OR MP ROTATOR IRRIGATION.
- ALL PROPOSED BAHIA SOD WILL BE IRRIGATED WITH A WATER ESTABLISHMENT PERIOD.

GRAPHIC SCALE
0 10 20 40 60
SCALE: 1" = 20'

NO.	DATE	APPR.	REVISION
2	05-20-15	CSC	INSERTED NEW BUILDING FOOTPRINT
1	04-14-15	CSC	REVISED PER UTILITY/CITY COMMENTS

Richard B. Tutt Landscape Architecture, Inc.
Richard B. Tutt, RLA, ASLA, CPCO
Florida Registered Landscape Architect
112 Canary Oak Drive
Ormond Beach, Florida 32174
Ph. (386) 672-4457 Fax (386) 672-2488
Email: rbtutt@bellsouth.net

MARK DOWST & ASSOCIATES, INC.
ENGINEERS * PLANNERS * SURVEYORS
EB 4335 LB 4335
536 N. HALIFAX AVENUE, SUITE # 100 • DAYTONA BEACH, FLORIDA 32118 • (386) 258-7999

SCALE	DESIGNED	DRAWN	CHECKED	DATE
1" = 20'	CSC	CSC	RBT	03-12-15

BY DATE

CONCEPTUAL LANDSCAPE PLAN
ENVIRONMENTAL LEARNING CENTER
ORMOND BEACH, FLORIDA

PROJECT NO. 1251 LA-1

1251_CON6LAND

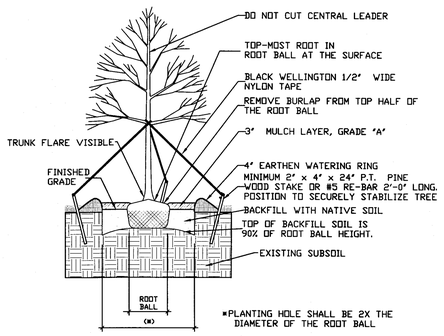

1 LARGE TREE PLANTING DETAIL

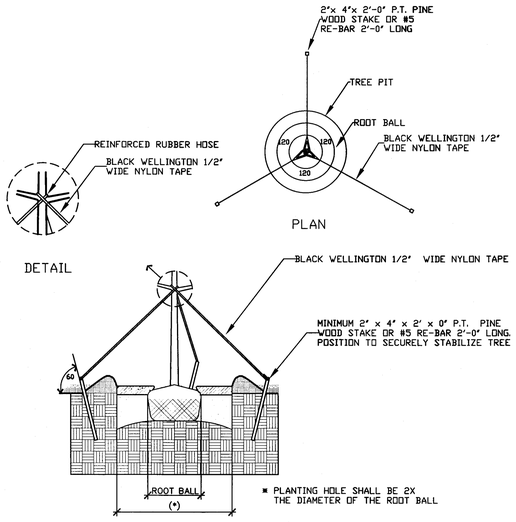

2 TYPICAL TREE GUYING DETAIL

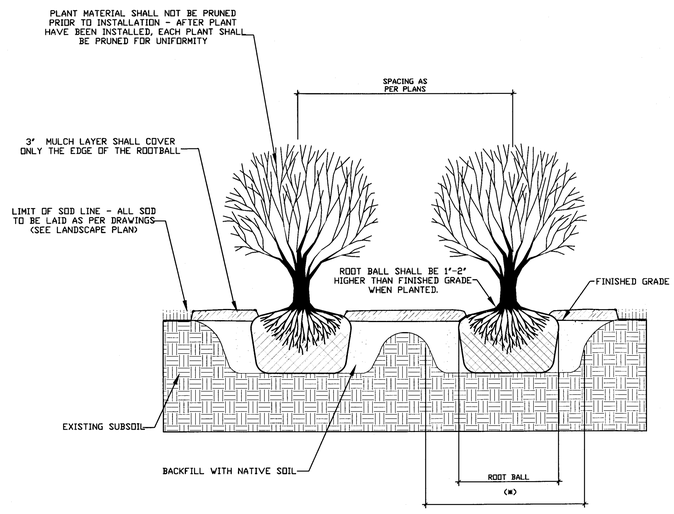

3 TYPICAL SHRUB PLANTING DETAIL

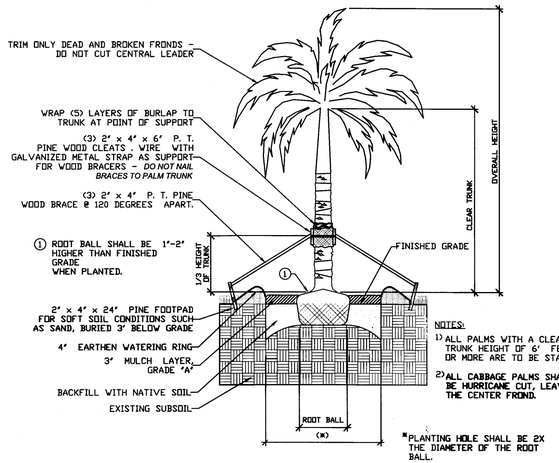

4 STRAIGHT TRUNK PALM DETAIL

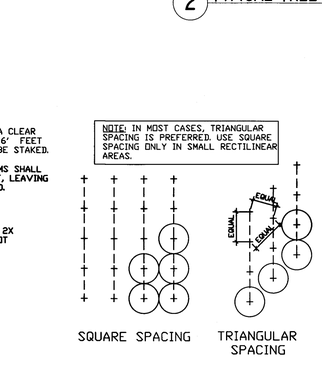

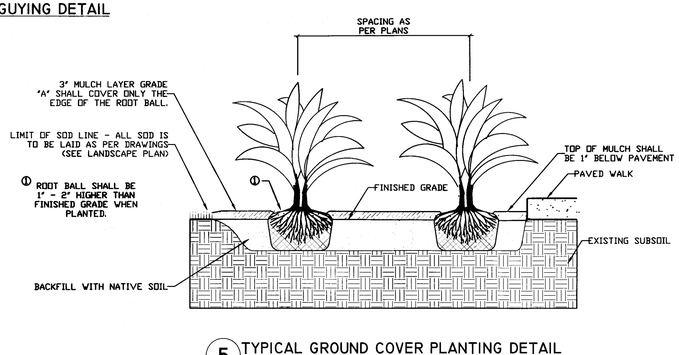

5 TYPICAL GROUND COVER PLANTING DETAIL

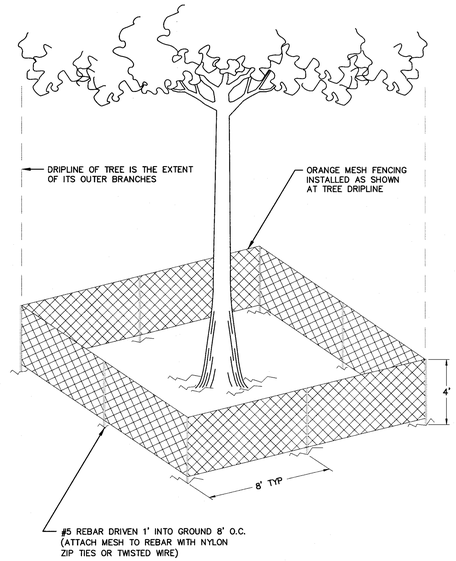

9 TREE BARRICADE DETAIL

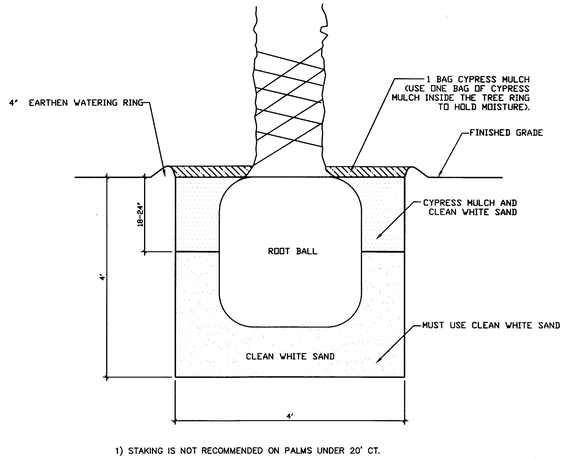

1) STAKING IS NOT RECOMMENDED ON PALMS UNDER 20' CT.
2) STAKING IS RECOMMENDED ON PALMS OVER 20' CT.

6 MEDJOOL PALM INSTALLATION SCHEMATIC
(INFORMATION BY GROUNDWORKS)

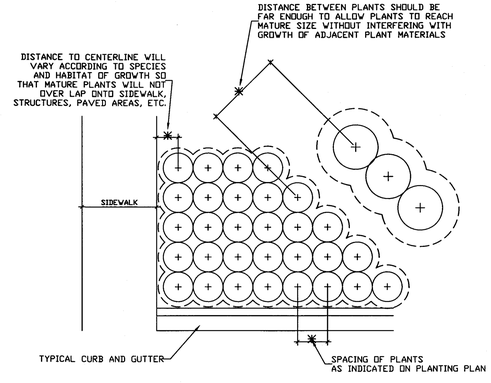

7 TYPICAL CONTAINER SPACING

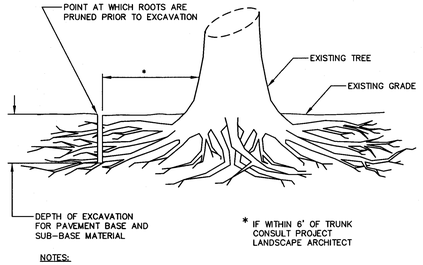

NOTES:
1) CUTS ARE TO BE MADE CLEANLY WITH A SHARP ROOT PRUNING TOOL (SUCH AS A DOSCO OR VERMEER ROOT PRUNER).
2) INSTALL ORANGE PLASTIC MESH TREE BARRIER, WITH REBAR SUPPORTS, AT POINT OF PRUNING AND CONTINUE COMPLETELY AROUND TREE, PROTECTING THE AREA WITHIN THE DRIPLINE (EXTENT OF OUTER BRANCHES).
3) ROOT PRUNING PROCEDURE MUST BE DONE AND INSPECTED PRIOR TO ISSUANCE OF A BUILDING PERMIT OR GRADING AND FILLING PEMIT.

8 ROOT PRUNING DETAIL

City of Ormond Beach
FINAL APPROVAL
Site Plan Review Committee

NO.	DATE	APPR.	REVISION

Richard B. Tyrell Landscape Architecture, Inc.
Richard B. Tyrell, RLA, ASLA CPCO
1122 Country Club Drive
Deltona, Florida 32725
Ph. (386) 575-4407 Fax (386) 575-0581
Email: rbtyrell@bellsouth.net

MARK DOWST & ASSOCIATES, INC.
ENGINEERS * PLANNERS * SURVEYORS
EB 4335 LB 4335
536 N. HALIFAX AVENUE, SUITE # 100 * DAYTONA BEACH, FLORIDA 32118 * (386) 258-7999

SCALE	DESIGNED	DRAWN	CHECKED	DATE
N.T.S.	CSC	CSC	RBT	03-12-15

BY DATE

LANDSCAPE DETAILS

ENVIRONMENTAL LEARNING CENTER

ORMOND BEACH, FLORIDA

PROJECT NO. 1251

LA-2

125ILANDET

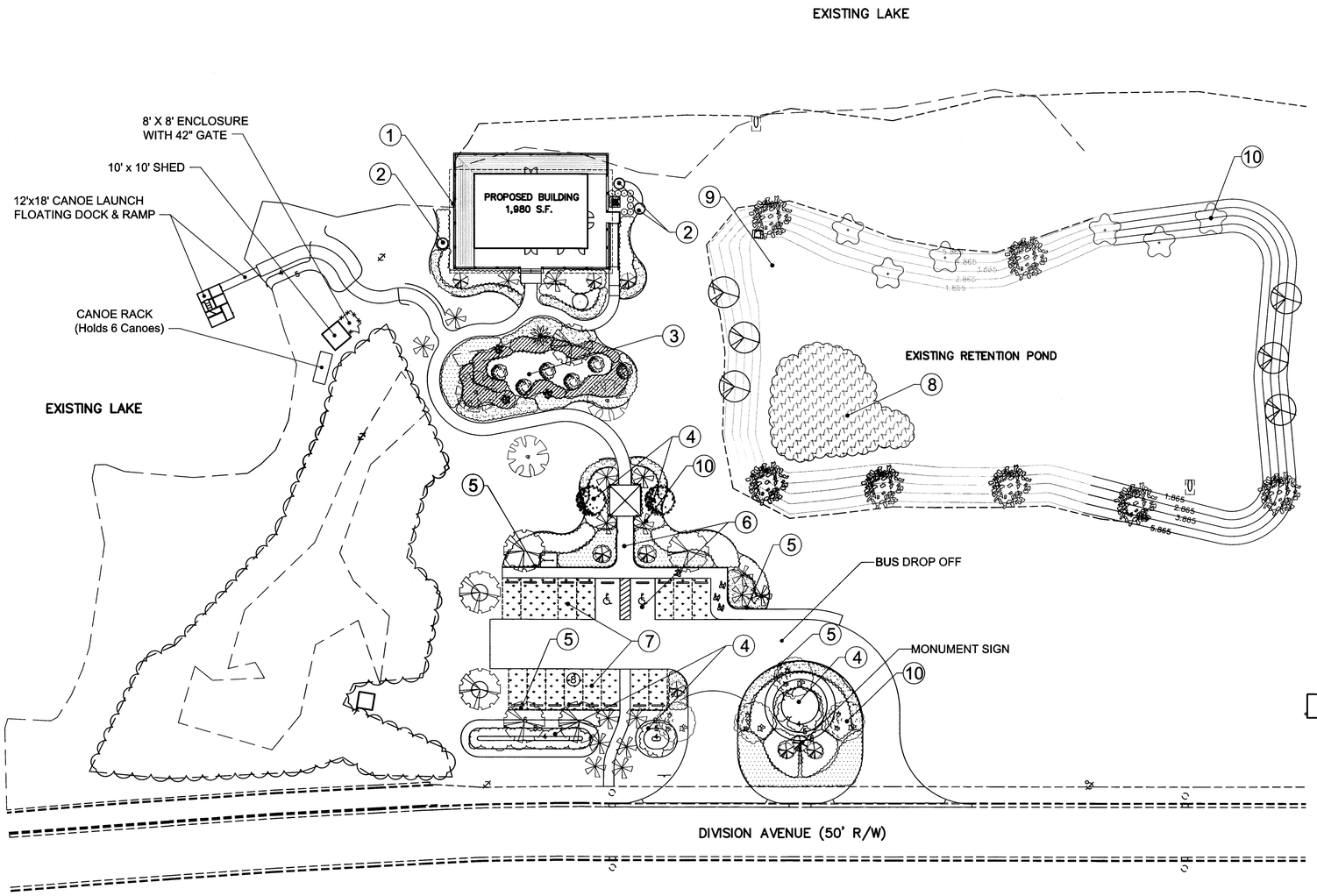

LOW IMPACT DEVELOPMENTS (LID) GOAL IS TO MIMIC A SITE'S PREDEVELOPMENT HYDROLOGY BY USING CONSTRUCTION TECHNIQUE'S THAT INFILTRATE, FILTER, STORE, EVAPORATE AND DETAIN RUNOFF ON THE PROJECT SITE. THE FOLLOWING LID PRINCIPLES WERE CHOSEN FOR THIS DESIGN.

KEY	LOW IMPACT DESIGN PRINCIPLES
1	DOWNSPOUTS TO RAIN GARDEN
2	RAINWATER HARVESTING
3	RAIN GARDEN
4	BIORETENTION
5	STONE TRENCH DRAIN
6	CONCRETE WITHOUT CURBS
7	VEGETATED FILTER STRIPS
8	FLOATING WETLAND
9	PUMP WATER FROM POND FOR IRRIGATION
10	REFORESTATION AND REVEGETATION

OTHER LOW IMPACT DESIGN FEATURES
- NO CLEARING/TREE REMOVAL
- INVASIVE PLANT REMOVAL ALONG SHORELINE
- BALANCED CUT/FILL BY UTILIZING STEM WALL CONSTRUCTION
- 100% NATIVE/XERIC PLANTING
- FERTILIZER/PESTICIDE FREE SITE
- BIKE RACKS
- CONCRETE DRIVE AISLES
- LED SITE LIGHTING
- GRASS PARKING
- BUS DROP-OFF AND PARKING

GRAPHIC SCALE
0 15 30 60 90
SCALE: 1" = 30'

City of Ormond Beach
FINAL APPROVAL
Site Plan Review Committee

NO.	DATE	APPR.	REVISION

JUN 01 2015
MARK STEVEN DOWST
LICENSE
STATE OF FLORIDA
PROFESSIONAL ENGINEER

MARK DOWST & ASSOCIATES, INC.
ENGINEERS * PLANNERS * SURVEYORS
EB 4335 LB 4335
536 N. HALIFAX AVENUE, SUITE # 100 • DAYTONA BEACH, FLORIDA 32118 • (386) 258-7999

SCALE	DESIGNED	DRAWN	CHECKED	DATE	BY
1" = 30'	CSC	CSC	RBT	05-04-15	DATE

LID DESIGN PRINCIPLES EXHIBIT
ENVIRONMENTAL LEARNING CENTER
ORMOND BEACH, FLORIDA

PROJECT NO. 1251 LID
1251_LID_PRINCIPLES

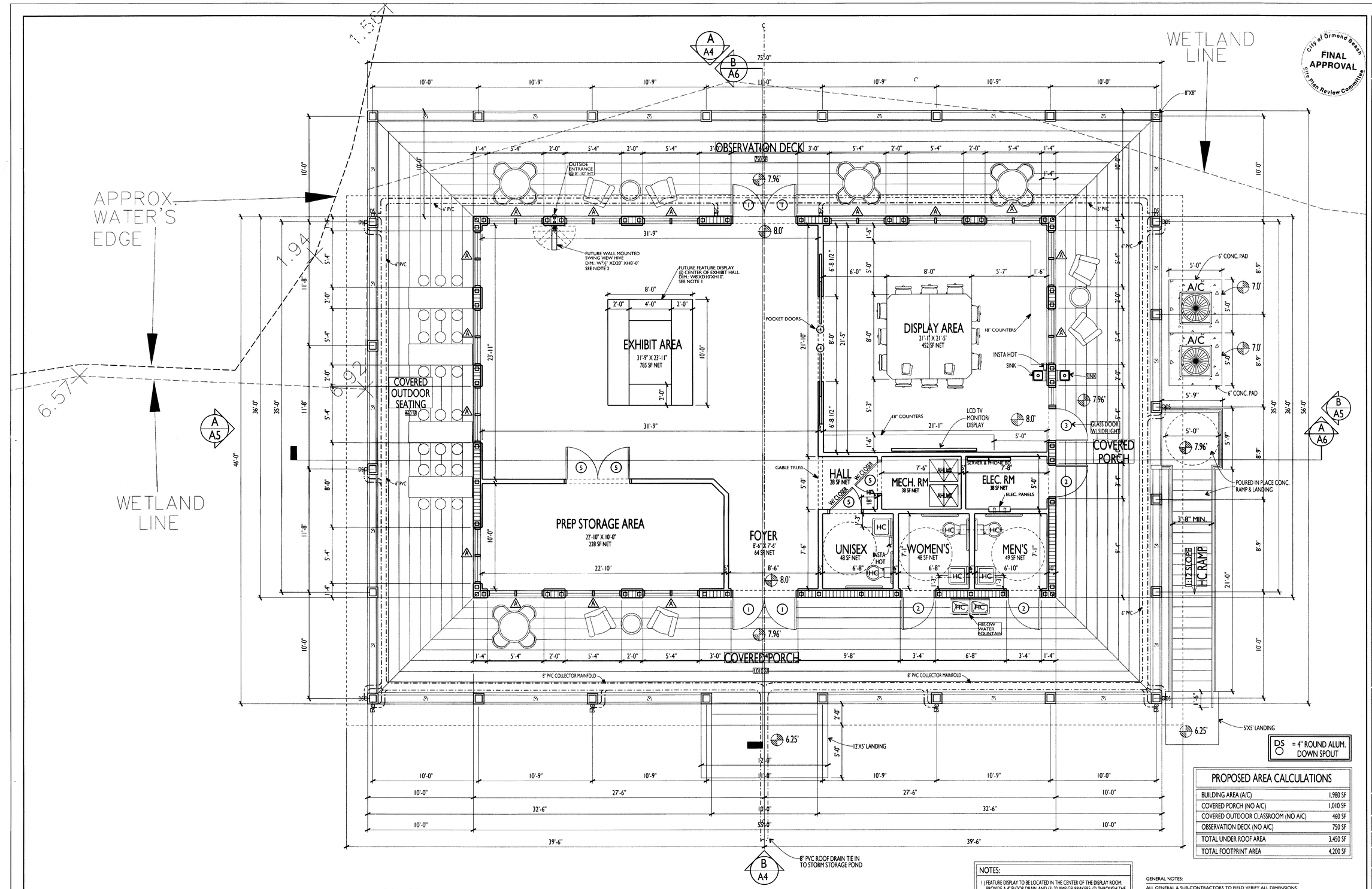

DS = 4" ROUND ALUM. DOWN SPOUT

PROPOSED AREA CALCULATIONS

BUILDING AREA (A/C)	1,980 SF
COVERED PORCH (NO A/C)	1,010 SF
COVERED OUTDOOR CLASSROOM (NO A/C)	460 SF
OBSERVATION DECK (NO A/C)	750 SF
TOTAL UNDER ROOF AREA	3,450 SF
TOTAL FOOTPRINT AREA	4,200 SF

NOTES:

1) FEATURE DISPLAY TO BE LOCATED IN THE CENTER OF THE DISPLAY ROOM. PROVIDE A 4" FLOOR DRAIN AND (3) 20 AMP GFI BRAKERS: (2) THROUGH THE SLAB FROM THE PUMPS AND FILTERS AND (1) DOWN FROM THE TOP FOR THE LIGHTING AND TV'S.

2) WALL MOUNTED SWING VIEW HIVE DISPLAY TO HAVE A THRU WALL TUBE TO OUTSIDE ENTRANCE @ 8'-10" HT. AFF.

GENERAL NOTES:

ALL GENERAL & SUB-CONTRACTORS TO FIELD VERIFY ALL DIMENSIONS, ELECTRICAL, WATER, SEWER AND GAS SERVICE LOCATIONS.
ALL WORK MUST COMPLY WITH THE 2010 EDITION (EXPOSURE "B") OF THE FLORIDA BUILDING CODE SECT. 1609/ 136 MPH WIND LOAD AND THE FLORIDA ACCESSIBILITY CODE FOR BUILDING CONSTRUCTION
ALL DOOR & WINDOW OPENINGS TO MEET OR EXCEED DESIGN PRESSURE RANGE AS SPECIFIED ON SHEET T8L
THE BUILDING RISK CATEGORY IS "II"
INTERNAL PRESSURE COEFFICIENT IS .18 IN ACCORDANCE WITH ASCE 7-10
ALL GLAZING IS TO BE IMPACT RESISTANT FOR DOORS AND WINDOW ASSEMBLIES.

A/A2 PROPOSED FLOOR PLAN W/ INFORMATION

SCALE: 1/4" = 1'-0"

© COPYRIGHT 2015 BPF DESIGN INCORPORATED

REVISIONS

City of Ormond Beach — FINAL APPROVAL — Site Plan Review Committee

ENVIRONMENTAL LEARNING CENTER

OWNER/DEVELOPER: CITY OF ORMOND BEACH, FL - 22 S. BEACH ST., ORMOND BEACH, FL 32174
PROJECT LOCATION: ORMOND BEACH CENTRAL PARK, 601 DIVISION AVENUE, ORMOND BEACH, FL 32174
GENERAL CONTRACTOR: A. M. WEIGEL CONSTRUCTION, INC., 166 S. PALMETTO AVENUE, DAYTONA BEACH, FL 32114 PH: 386/257-6891

BPF DESIGN INCORPORATED
ARCHITECTURE, DESIGN, & DRAWING SERVICES
AA 26001108
BRIAN P. FREDLEY, ASSOC. AIA, PROJECT MANAGER
DALLAS B. PEACOCK, AIA, ARCHITECT
AR 0009706
207 FAIRVIEW AVENUE, DAYTONA BEACH, FL 32114
PH: (386) 257-0502 FX: (386) 257-1050
E-MAIL: bpfdesign@bfl.rr.com WEBSITE: bpfdesign.net

PROPOSED FLOOR PLAN

DATE: MAY 18, 2015
SCALE: 1/4"=1'-0"
SHT NO. A2

0 1' 3 7 10'

ARCHITECT'S / ENGINEER'S SEAL

5/18/15

ELC_Nplan.DGN 5/22/2015 5:12:57 PM

B
A4

PROPOSED BUILDING ELEVATION

ELC SOUTH FACADE

SCALE: 1 /4" = 1'-0"

ARCHITECTURAL STYLE: FLORIDA CRACKER

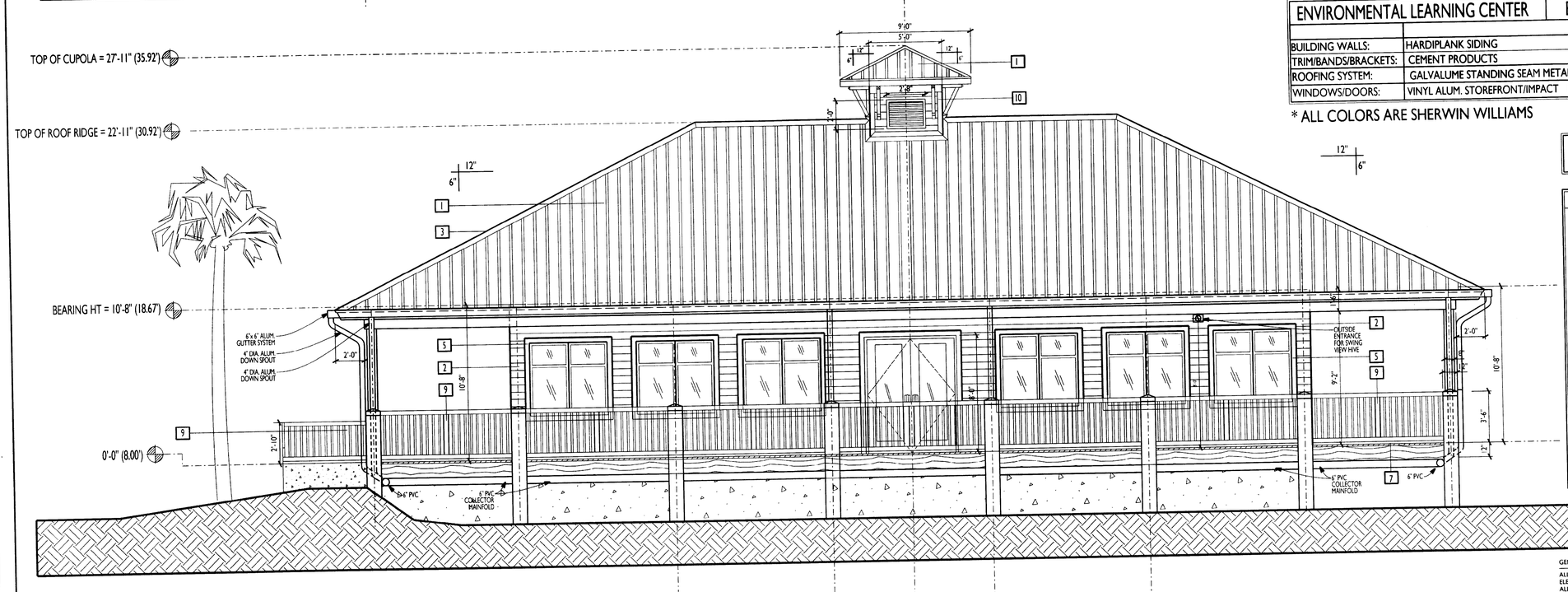

A
A4

PROPOSED BUILDING ELEVATION

ELC NORTH FACADE

SCALE: 1 /4" = 1'-0"

ENVIRONMENTAL LEARNING CENTER	BUILDING MATERIALS/COLORS LEGEND		
BUILDING WALLS:	HARDIPLANK SIDING	SW 7654	LATTICE
		SW 7013	IVORY LACE
TRIM/BANDS/BRACKETS:	CEMENT PRODUCTS	------	SILVER
ROOFING SYSTEM:	GALVALUME STANDING SEAM METAL ROOF		
WINDOWS/DOORS:	VINYL ALUM. STOREFRONT/IMPACT FACTORY WHITE LOW-E, TINTED		

* ALL COLORS ARE SHERWIN WILLIAMS

ARCHITECTURAL STYLE: FLORIDA CRACKER

FLORIDA CRACKER STYLE ATTRIBUTES:

1. ATTRIBUTE NO. 1: STANDING SEAM METAL ROOF
2. ATTRIBUTE NO. 2: PREDOMINANT EXTERIOR COLOR SHALL BE PASTEL COLORS; PINK, YELLOW, GREY, BLUE OR WHITE
3. ATTRIBUTE NO. 3: STEEP PITCHED GABLED AND HIPPED ROOFS
4. ATTRIBUTE NO. 4: EXPOSED TRUSS WORK
5. ATTRIBUTE NO. 5: SIMPLE WOOD TRIM
6. ATTRIBUTE NO. 6: DORMER WINDOW (NOT USED)
7. ATTRIBUTE NO. 7: WOOD FRAME CONSTRUCTION
8. ATTRIBUTE NO. 8: LOW PITCHED ROOF PORCHES (NOT USED)
9. ATTRIBUTE NO. 9: SIMPLE WOOD RAILING
10. ATTRIBUTE NO. 10: WOOD FRAME CUPOLA

GENERAL NOTES:

ALL GENERAL & SUB-CONTRACTORS TO FIELD VERIFY ALL DIMENSIONS.
ELECTRICAL, WATER, SEWER AND GAS SERVICE LOCATIONS.
ALL WORK MUST COMPLY WITH THE 2010 EDITION (EXPOSURE "B")
OF THE FLORIDA BUILDING CODE SECT. 1609 136 MPH WIND LOAD
AND THE FLORIDA ACCESSIBILITY CODE FOR BUILDING CONSTRUCTION
ALL DOOR & WINDOW OPENINGS TO MEET OR EXCEED DESIGN PRESSURE RANGE
AS SPECIFIED ON SHEET TBL
THE BUILDING RISK CATEGORY IS "II"
INTERNAL PRESSURE COEFFICIENT IS .18 IN ACCORDANCE WITH ASCE 7-10
ALL GLAZING IS TO BE IMPACT RESISTANT FOR DOORS AND WINDOW ASSEMBLIES.

© COPYRIGHT 2015 BPF DESIGN INCORPORATED

REVISIONS

1	

City of Ormond Beach FINAL APPROVAL Review Committee

ENVIRONMENTAL LEARNING CENTER

OWNER/DEVELOPER: CITY OF ORMOND BEACH, FL - 22 S. BEACH ST., ORMOND BEACH, FL 32174
PROJECT LOCATION: ORMOND BEACH CENTRAL PARK, 601 DIVISION AVENUE, ORMOND BEACH, FL 32174
GENERAL CONTRACTOR: A. M. WEIGEL CONSTRUCTION, INC., A. MICHAEL WEIGEL, PRESIDENT, CGC 1507686, 166 S. PALMETTO AVENUE, DAYTONA BEACH, FL 32114 PH: 386/257-4691

BPF
DESIGN INCORPORATED
ARCHITECTURE, DESIGN, & DRAWING SERVICES
AA 26001108
BRIAN P. FREDLEY, ASSOC. AIA, PROJECT MANAGER
DALLAS B. PEACOCK, AIA, ARCHITECT
AR 0009706
207 FAIRVIEW AVENUE, DAYTONA BEACH, FL 32114
PH: (386) 257-0500 FX: (386) 257-1050
E-MAIL: bpfdesign@cfl.rr.com WEBSITE: bpfdesign.net

PROPOSED BUILDING ELEVATIONS

DATE: MAY 18, 2015

SCALE: 1/4"=1'-0"

SHT NO. A4

0 1' 3' 7' 10'

ARCHITECT'S / ENGINEER'S SEAL

5/22/15

ELC_Elevs.DGN 5/22/2015 3:55:02 PM

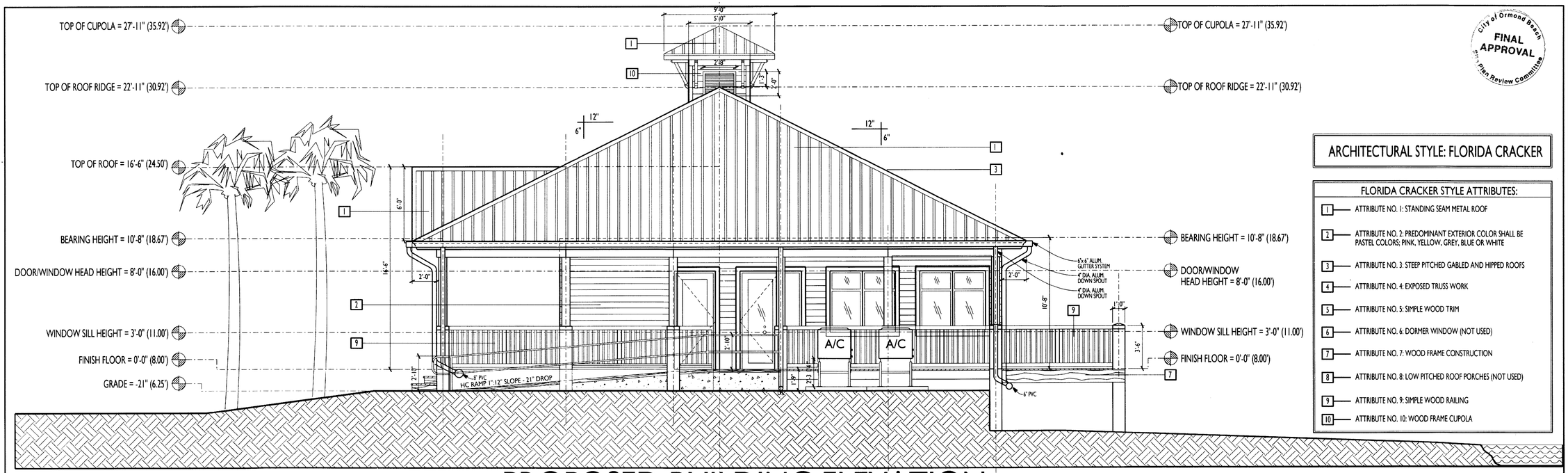

B / A5 **PROPOSED BUILDING ELEVATION**

ELC EAST FACADE

SCALE: 1 /4" = 1'-0"

ARCHITECTURAL STYLE: FLORIDA CRACKER

FLORIDA CRACKER STYLE ATTRIBUTES:

1. ATTRIBUTE NO. 1: STANDING SEAM METAL ROOF
2. ATTRIBUTE NO. 2: PREDOMINANT EXTERIOR COLOR SHALL BE PASTEL COLORS: PINK, YELLOW, GREY, BLUE OR WHITE
3. ATTRIBUTE NO. 3: STEEP PITCHED GABLED AND HIPPED ROOFS
4. ATTRIBUTE NO. 4: EXPOSED TRUSS WORK
5. ATTRIBUTE NO. 5: SIMPLE WOOD TRIM
6. ATTRIBUTE NO. 6: DORMER WINDOW (NOT USED)
7. ATTRIBUTE NO. 7: WOOD FRAME CONSTRUCTION
8. ATTRIBUTE NO. 8: LOW PITCHED ROOF PORCHES (NOT USED)
9. ATTRIBUTE NO. 9: SIMPLE WOOD RAILING
10. ATTRIBUTE NO. 10: WOOD FRAME CUPOLA

ENVIRONMENTAL LEARNING CENTER	BUILDING MATERIALS/COLORS LEGEND		
BUILDING WALLS:	HARDIPLANK SIDING	SW 7654	LATTICE
TRIM/BANDS/BRACKETS:	CEMENT PRODUCTS	SW 7013	IVORY LACE
ROOFING SYSTEM:	GALVALUME STANDING SEAM METAL ROOF	------	SILVER
WINDOWS/DOORS:	VINYL ALUM. STOREFRONT/IMPACT FACTORY WHITE LOW-E, TINTED		

* ALL COLORS ARE SHERWIN WILLIAMS

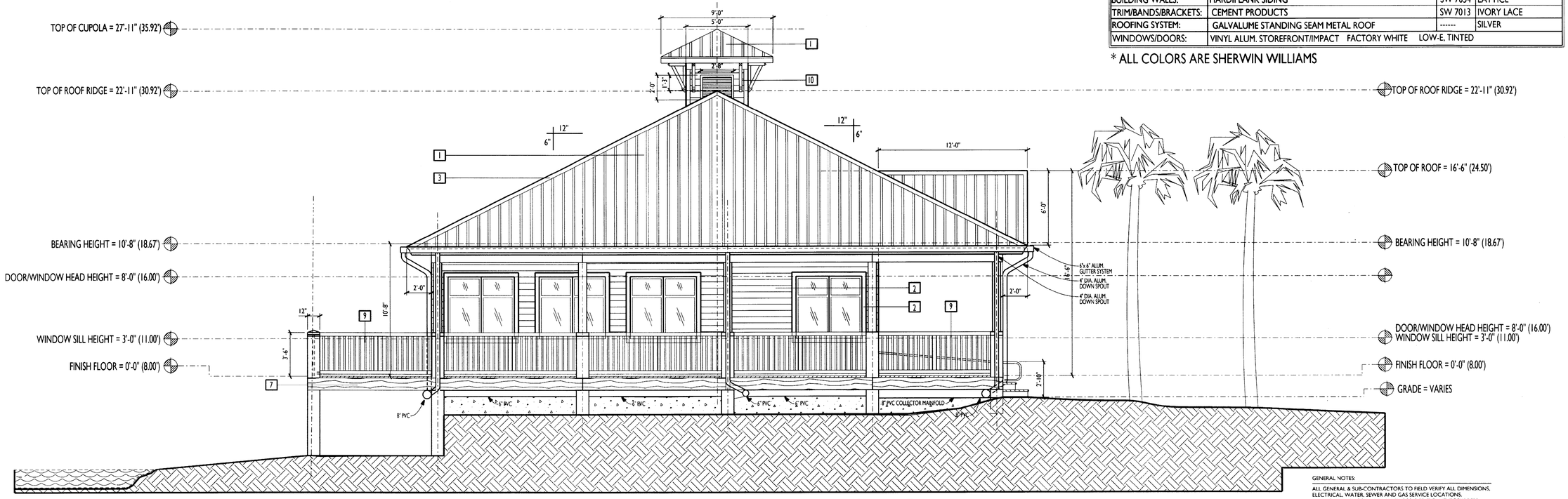

A / A5 **PROPOSED BUILDING ELEVATION**

ELC WEST FACADE

SCALE: 1 /4" = 1'-0"

ARCHITECTURAL STYLE: FLORIDA CRACKER

GENERAL NOTES:

ALL GENERAL & SUB-CONTRACTORS TO FIELD VERIFY ALL DIMENSIONS, ELECTRICAL, WATER, SEWER AND GAS SERVICE LOCATIONS.
ALL WORK MUST COMPLY WITH THE 2010 EDITION (EXPOSURE "B") OF THE FLORIDA BUILDING CODE SECT. 1609/ 136 MPH WIND LOAD AND THE FLORIDA ACCESSIBILITY CODE FOR BUILDING CONSTRUCTION
ALL DOOR & WINDOW OPENINGS TO MEET OR EXCEED DESIGN PRESSURE RANGE AS SPECIFIED ON SHEET TBL
THE BUILDING RISK CATEGORY IS "II"
INTERNAL PRESSURE COEFFICIENT IS .18 IN ACCORDANCE WITH ASCE 7-10
ALL GLAZING IS TO BE IMPACT RESISTANT FOR DOORS AND WINDOW ASSEMBLIES.

© COPYRIGHT 2015 BPF DESIGN INCORPORATED

City of Ormond Beach
FINAL APPROVAL
Site Plan Review Committee

REVISIONS

ENVIRONMENTAL LEARNING CENTER

OWNER/DEVELOPER: CITY OF ORMOND BEACH, FL - 22 S. BEACH ST., ORMOND BEACH, FL 32174
PROJECT LOCATION: ORMOND BEACH CENTRAL PARK, 601 DIVISION AVENUE, ORMOND BEACH, FL 32174
GENERAL CONTRACTOR: A. M. WEIGEL CONSTRUCTION, INC., A. MICHAEL WEIGEL, PRESIDENT, CGC 1507886, 166 S. PALMETTO AVENUE, DAYTONA BEACH, FL 32114 PH: 386/257-6691

BPF
DESIGN INCORPORATED
ARCHITECTURE, DESIGN, & DRAWING SERVICES
AA 26001108
BRIAN P. FREDLEY, ASSOC. AIA, PROJECT MANAGER
DALLAS B. PEACOCK, AIA, ARCHITECT
AR 0009706
207 FAIRVIEW AVENUE, DAYTONA BEACH, FL 32114
PH: (386) 257-0502 FX: (386) 257-1050
E-MAIL: bpfdesign@cfl.rr.com WEBSITE: bpfdesign.net

PROPOSED BUILDING ELEVATIONS

DATE: MAY 18, 2015

SHT NO. A5

SCALE: 1/4"=1'-0"

0 1' 3' 7' 10'

ARCHITECT'S / ENGINEER'S SEAL

4/21/15

ELC_Elevs.DGN 5/22/2015 4:24:10 PM

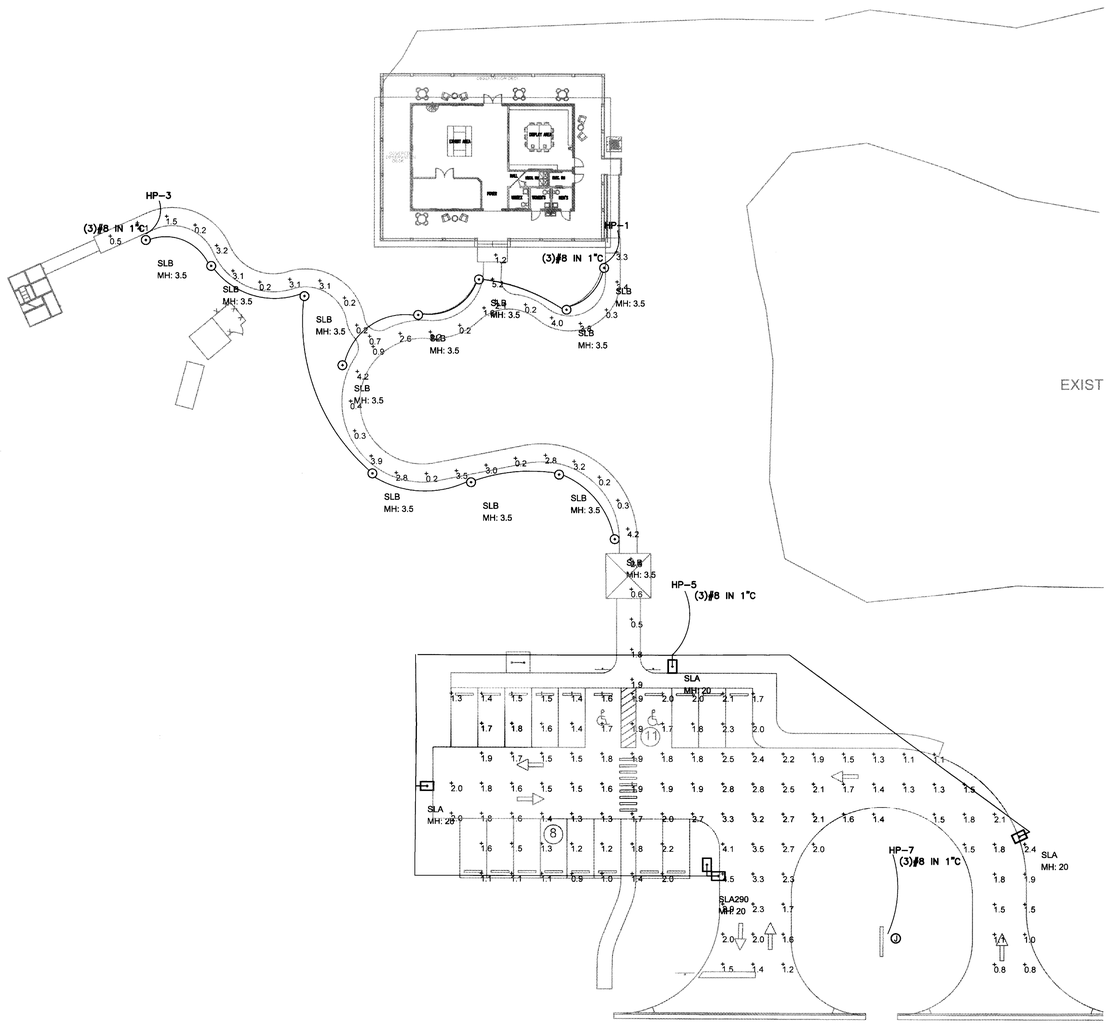

1 SL1 ELECTRICAL SITE LIGHTING
N.T.S

Luminaire Schedule										
Label	Symbol	Qty	Arrangement	[MANUFAC]	Description	No. Lamps	Lumens/Lamp	Lum. Lumens	LLF	Lum. Watts	Total Watts
SLA		3	SINGLE	Lithonia Lighting	DSX0 LED 40C 700 40K T3M MVOLT XPA DDBXD; POLE MOUNTED @ 20' AFG	1	N.A.	9075	0.900	91	273
SLA290		1	2 @ 90 DEGREES	Lithonia Lighting	DSX0 LED 40C 700 40K T3M MVOLT XPA DDBXD; POLE MOUNTED @ 20' AFG	1	N.A.	9075	0.900	91	182
SLB		12	SINGLE	Lithonia Lighting	DSXB LED 12C 530 50K ASY DDBXD; BOLLARD	1	N.A.	1334	0.900	22	264

Calculation Summary							
Label	CalcType	Units	Avg	Max	Min	Avg/Min	Max/Min
PARKING AND BUS LOOP	Illuminance	Fc	1.82	4.5	0.8	2.28	5.63
SIDEWALK	Illuminance	Fc	1.98	5.2	0.2	9.90	26.00

POLE MOUNTING DETAIL

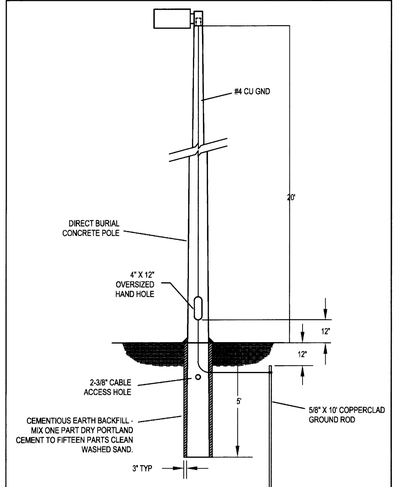

SITE LIGHTING NOTES

1. REFER TO ELECTRICAL DRAWINGS FOR POWER RUNS/CIRCUITRY & SLEEVE LOCATIONS.
2. STUB OUT SERVICE TO LANDSCAPE LIGHTS IN BROOKS BOX IN APPROX. TREE/PALM LOCATIONS PER PLAN. EXACT LANDSCAPE LIGHT FIXTURE LOCATION WILL BE FLAGGED IN FIELD BY LANDSCAPE ARCHITECT W/ ELECTRICAL CONTRACTOR AFTER TREES/PALMS ARE INSTALLED & BEFORE SHRUBS/GROUND COVER ARE INSTALLED.
3. LAYOUT/STAKE IN FIELD FOR APPROVAL BY OWNER. FIELD ADJUST STREET LIGHT FIXTURE IF UNDER TREE LIMS/CANOPY.
4. LIGHT POLES OR BOLLARDS TO BE A MIN. 6'-0" FROM EDGE OF CURB (ON ROAD WAYS, TYP.)
5. PROVIDE LIGHTING TIME CLOCK WITH CONTACTORS, BATTERY BACKUP & ASTRONOMICAL SETTINGS FOR NEW LIGHTING CIRCUITS.
6. ALL MATERIALS SHALL BE NEW, FREE FROM DEFECTS AND SHALL BE EITHER U.L. LABELED, U.L. LISTING OR THE SEAL OF A NATIONALLY RECOGNIZED ELECTRICAL TESTING LABORATORY.
7. ALL MATERIAL AND INSTALLATION SHALL BE IN ACCORDANCE WITH THE LATEST EDITION OF THE NATIONAL ELECTRICAL CODE AND ALL APPLICABLE LOCAL AND STATE CODES.
8. FURNISH ALL LABOR, MATERIALS, EQUIPMENT AND INCIDENTALS REQUIRED FOR A COMPLETE ELECTRICAL SYSTEM AS HEREINAFTER SPECIFIED AND SHOWN ON THE DWG'S AND SPECIFICATIONS, WHETHER OR NOT SPECIFICALLY SHOWN OR CALLED FOR.
9. CONTRACT BID PRICE TO INCLUDE THE FOREGOING AS WELL AS ALL FEES REQUIRED FOR PERMITS, INSPECTIONS AND ENGINEERS DWG'S / STAMP IF REQUIRED.
10. COORDINATE WITH OWNERS REPRESENTATIVE REGARDING ELECTRICAL SERVICE WITH POWER COMPANY.
11. PROVIDE SHOP DRAWINGS OF FIXTURES TO OWNER & ARCHITECT FOR APPROVAL

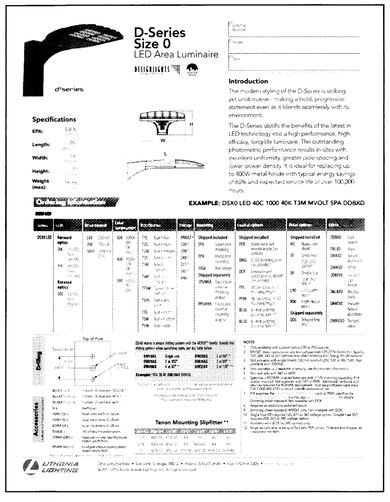

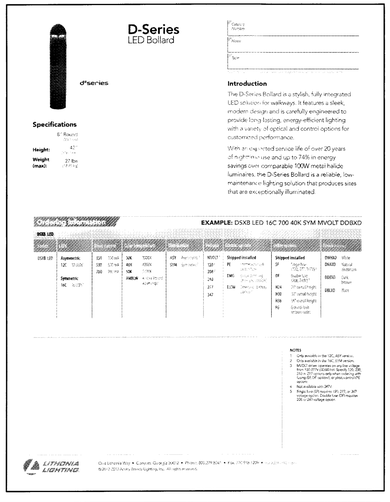

CONTACTOR DETAIL

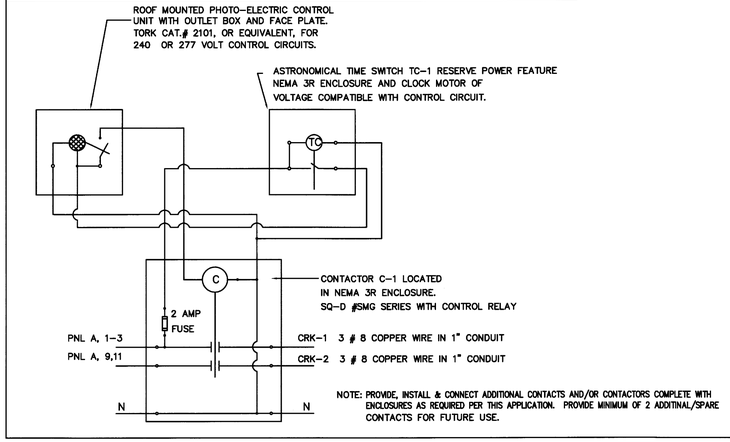

City of Ormond Beach
FINAL APPROVAL
Site Plan Review Committee

REVISIONS

M. T. FARAJI, PA
1325 S BUMBY AVE
ORLANDO, FLORIDA 32806
407-896-7411
407-896-7412 - FAX
EPGroup@att.net
CA # 8126
MOHSEN FARAJI, PE # 43599

PROJECT NUMBER:
MTF15006

ENVIROMENTAL LEARNING CENTER

OWNER/DEVELOPER: CITY OF ORMOND BEACH, FL
PROJECT LOCATION: ORMOND BEACH CENTRAL PARK, NORTH OF DIVISION AVENUE, EAST OF OLD KINGS RD, ORMOND BEACH, FL
GENERAL CONTRACTOR: A.M. MEIGEL CONSTRUCTION INC., A. MICHAEL MEIGEL PRESIDENT, CGC 1507686, 166 S. PALMETTO AVENUE, DAYTONA BEACH, FL 32114 PH: 386/257-6691

BPF
DESIGN INCORPORATED
ARCHITECTURE, DESIGN, & DRAWING SERVICES
AA 26001108
BRIAN P. FREDLEY, ASSOC. AIA, PROJECT MANAGER
DALLAS B. PEACOCK, AIA, ARCHITECT
AR 0009706
207 FAIRVIEW AVENUE, DAYTONA BEACH, FL 32114
PH: (386) 257-0502 FX: (386) 257-1050
E-MAIL: bpfdesign@cfl.rr.com WEBSITE: bpfdesign.net

ELECTRICAL SITE LIGHTING

DATE: 04/17/2015
SCALE: AS SHOWN
SHT NO. SL1

0 1' 4' 10' 12'

ARCHITECT'S / ENGINEER'S SEAL
MOHSEN FARAJI-TAJRISHI * PROFESSIONAL ENGINEER * LICENSE NO. 43599 * STATE OF FLORIDA