ORMOND RENAISSANCE CONDOMINIUM

ORMOND BEACH, FLORIDA

GENERAL INFORMATION

OWNER/DEVELOPER:

ORMOND KING CENTER, LLC
ERNEST V. LACOUR
MANAGER
220 CHARLES STREET
PORT ORANGE, FL 32129
E:MAIL: buddy@lacourandcompany.com
w/copy to: chris@acourandcompany.com

ENGINEER, APPLICANT LANDSCAPE ARCHITECT:

PARKER MYNCHENBERG & ASSOC., INC.
PARKER MYNCHENBERG, P.E. #32645 L.A. #1553
1729 RIDGEWOOD AVENUE
HOLLY HILL, FLORIDA 32117 (386) 677-6891 FAX
(386) 677-2114 FAX (386) 677-2114
E:MAIL: info@parkermynchenberg.com

SURVEYOR:

UPHAM, INC.
CONSULTING ENGINEERS AND SURVEYORS
ROGER W. STRCULA, PE, CPESC, PRESIDENT
265 KENILWORTH AVENUE
ORMOND BEACH, FLORIDA 32174
(386) 672-9515 FAX (386) 673-6554
LB #0003612 LC #0000357
E:MAIL: uphaminc.com

ARCHITECT:

DAVID HOWARD
ARCHITECT'S COLLABORATIVE, INC.
17904 SINGING WOOD PLACE
LUTZ, FLORIDA 33548
(813) 787-5848
E:MAIL: aci-dhoward@tampabay.rr.com

STATEMENT OF INTENT:

CONSTRUCT (11) ELEVEN 26 UNIT BUILDINGS, 5 STORY (GARAGE PARKING 1ST FLOOR, 26 PARKING STALLS) FOR A TOTAL OF 286 MULTI-FAMILY CONDOMINIUM, A 3,500 S.F., 1 STORY CLUBHOUSE WITH SWIMMING POOL & SPA, WITH ADDITIONAL PARKING, LANDSCAPING, IRRIGATION, LIGHTING, FENCING AND GATES. ALSO A 4,437 S.F., 1 STORY CHURCH WITH 100 SEATS AND A 2,800 S.F., 1 STORY HALL WITH ADDITIONAL 45 PARKING STALLS WITH ASSOCIATED FENCING, LIGHTING, LANDSCAPING AND IRRIGATION.

SITE ADDRESS:
875 STERTHAUS DRIVE
ORMOND BEACH, FLORIDA 32174

TAX PARCEL NUMBER: 4241-01-05-0070,&
4241-01-05-0080

LAND USE TABULATION

EXISTING ZONING = B-1 (PROFESSIONAL OFFICE/HOSPITAL
PROPOSED ZONING = PBD (PLANNED BUSINESS DISTRICT)
EXISTING LAND USE = OP (OFFICE PROFESSIONAL & PUBLIC INSTITUTIONAL)
PROPOSED LAND USE = OP (OFFICE PROFESSIONAL)

EXISTING USE: VACANT

PROPOSED USE: 5 STORY, (11) BUILDING, 286 UNIT, MULTI-FAMILY CONDOMINIUM WITH 1ST FLOOR PARKING GARAGE & 100 SEAT 4,437 S.F. CHURCH WITH 2,800 S.F. CHURCH HALL.
SITE AREA = 27.607 ACRES = 1,202,560.92 S.F. (100%)

BUILDING COVERAGE:
1) CONDOMINIUM
(11) BUILDINGS @ 13,000 S.F. = 143,000 S.F.
2) CLUBHOUSE = 3,500 S.F.
3) CHURCH BUILDING = 4,437 S.F.
4) CHURCH HALL = 2,800 S.F.
TOTAL = 153,737 S.F. = 13% COVERAGE

DENSITY = 286 UNITS / 27.607 ACRES = 10.36 DU / ACRE

TOTAL BUILDINGS S.F.
1) CONDOMINIUM = 355,146 S,F,
2) CLUBHOUSE = 3,500 S.F.
3) CHURCH BUILDING = 4,437 S.F.
4) CHURCH HALL = 2,800 S.F.
TOTAL = 365,883 S.F. = 30% COVERAGE

BUILDING SETBACKS:
FRONT 30'
SIDE 30'
SIDE CORNER 30"
REAR 30'
FAR = 365,883 / 1,202,560.92 = 0.3043

IMPERVIOUS AREA
BUILDINGS = 153,737 S.F.
PARKING/DRIVEWAY/SIDEWALKS = _____ S.F.
TOTAL = _____ S.F. = _____%

LANDSCAPING AREA = _____ S.F. = _____%

LANDSCAPE BUFFERS:

	REQUIRED:	PROVIDED:
OLD KINGS ROAD	10 FT.	20 FT.
STERHAUS DRIVE	10 FT.	30 FT.
CENTER STREET	10 FT.	20 FT.
NORTH BOUNDARY	10 FT.	10 FT.

BUILDING DATA:

1) NUMBER OF STORIES: 5 TYPE IA ON 1ST FLOOR
2) TYPE OF CONSTRUCTION: TYPE IIA ON UPPER FLOORS

3) FINISH FLOOR ELEVATION: 7.50 – 11.00

PARKING CALCULATION:

PARKING REQUIRED:
(11 BUILDINGS) X (26 UNITS/BUILDING) X (2 SPOTS/UNIT) = 572 SPACES
ADDITIONAL VISITOR PARKING = 5% = 29 REQUIRED = 601 SPACES

CONDOMINIUM PARKING PROVIDED:
(11) PARKING GARAGES @ 26 SPACES/GARAGE = 286 SPACES
SURFACE PARKING:
STANDARD = 348
HANDICAPPED = 22
TOTAL CONDOMINIUM PROVIDED = 656 SPACES

CHURCH PARKING:
100 SEATS @ 1 PER 3 SEATS = 33.33 SPACES
2,800 S.F. CHURCH HALL @ 4/1,000 = 11.2 SPACES
TOTAL REQUIRED = 45 SPACES

PARKING PROVIDED:
STANDARD = 2
HANDICAPPED = 43
TOTAL = 45 SPACES

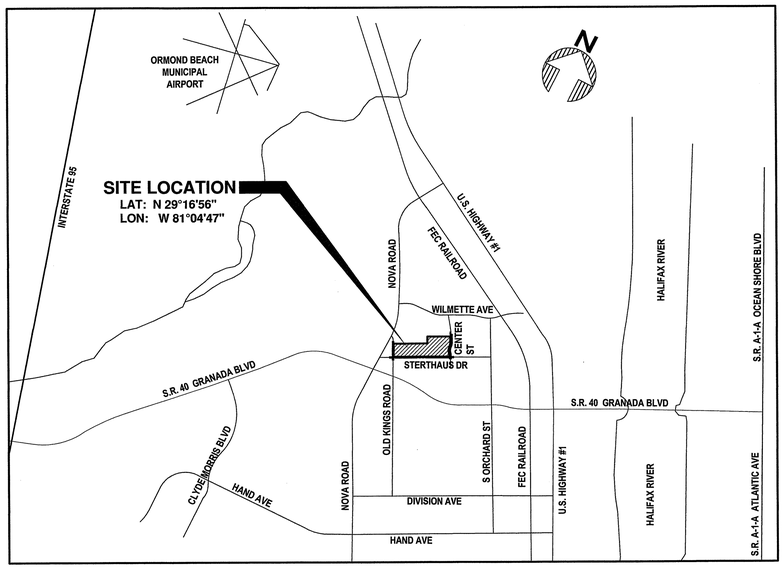

VICINITY MAP

TABLE OF CONTENTS

SHEET NO.	DESCRIPTION
1	COVER SHEET
2-7	SURVEY
8	KEY MAP
9-13	DEMOLITION AND EROSION CONTROL PLAN
14-18	SITE PLAN
19-23	CIVIL SITE PLAN
24-28	UTILITY SITE PLAN
29-33	LANDSCAPE PLAN
34	LANDSCAPE DETAILS
35-39	IRRIGATION PLAN
40	IRRIGATION DETAILS
41-44	PAVING & DRAINAGE DETAILS
45-46	WATER SYSTEM DISTRIBUTION DETAILS
47-48	SANITARY SEWER COLLECTION SYSTEM DETAILS

GENERAL NOTES:

1. ALL CONSTRUCTION SHALL BE IN ACCORDANCE WITH THE CITY OF ORMOND BEACH'S LAND DEVELOPMENT CODE REQUIREMENTS, AND THE STANDARD CONSTRUCTION DETAILS AND CONSTRUCTION SPECIFICATIONS (SCDCS). AN ENGINEERING PERMIT AND TREE REMOVAL PERMIT IS REQUIRED PRIOR TO STARTING CONSTRUCTION.
2. NO LAND SHALL BE CLEARED, EXCAVATED OR FILLED AND NO STRUCTURE SHALL BE ERECTED, REPAIRED OR DEMOLISHED WITHOUT PROPER PERMIT(S) AS REQUIRED BY THE CITY OF ORMOND BEACH.
3. NOTIFY THE CITY OF ORMOND BEACH'S ENGINEERING DIVISION AT 676-3269 48 HOURS PRIOR TO THE START OF CONSTRUCTION.
4. ANY CONSTRUCTION CHANGES TO APPROVED PLANS SHALL BE SUBMITTED TO THE CITY OF ORMOND BEACH FOR APPROVAL PRIOR TO PERFORMING THE WORK.
5. ROAD CONSTRUCTION AND PIPE INSTALLATION COMPACTION AND DENSITY TESTING SHALL CONFORM TO THE CITY OF ORMOND BEACH'S MINIMUM REQUIREMENTS. CERTIFIED COPIES OF TEST REPORTS SHALL BE SUBMITTED TO THE CITY INSPECTOR AND THE CITY'S ENGINEERING DIVISION.
6. A PRE-PAVING UTILITY INSPECTION MUST BE REQUESTED AND COMPLETED PRIOR TO THE PAVING OF ALL ROADS, STREETS, AND PARKING AREAS.
7. A FINAL INSPECTION, TO BE CONDUCTED BY THE CITY OF ORMOND BEACH, SHALL BE PERFORMED ON ALL CONSTRUCTION. THE DESIGN ENGINEER SHALL NOTIFY THE CITY OF ORMOND WHEN REQUESTING A FINAL INSPECTION.
8. THREE COMPLETE SETS OF AS-BUILT DRAWINGS (5 FOR SUBDIVISIONS) ARE REQUIRED TO BE SUBMITTED TO THE CITY OF ORMOND BEACH PRIOR TO REQUESTING A FINAL INSPECTION.
9. THE CITY HAS A CONTRACTOR FOR ROLL OFF SERVICE. NO OTHER CONTRACTOR SHALL BE PERMITTED TO PROVIDE THIS SERVICE. VERIFIY COMPANY UNDER CONTRACT WITH THE CITY.
10. CONSTRUCTION SITES THAT DISTURB ONE ACRE OR MORE WILL BE REQUIRED TO SEEK COVERAGE UNDER THE GENERIC PERMIT FOR STORMWATER DISCHARGE FROM LARGE AND SMALL CONSTRUCTION ACTIVITIES. IN ACCORDANCE WITH THIS REQUIREMENT, A STORMWATER POLLUTION PREVENTION PLAN (SWPP) MUST BE SUBMITTED TO THE CITY'S ENGINEERING DIVISION PRIOR TO CONSTRUCTION TO BE IN COMPLIANCE WITH THE PERMIT.

IN ORDER TO INSURE THAT NEW DEVELOPMENTS WITHIN THE CITY ARE CONSTRUCTED SUBSTANTIALLY IN ACCORDANCE WITH CITY REGULATIONS AND THE APPROVED DRAWINGS, THE FOLLOWING INFORMATION IS REQUIRED ON ALL PAVING AND DRAINAGE "AS-BUILT" DRAWINGS:

1. PAVEMENT AND CURB WIDTHS SHALL BE VERIFIED AND DIMENSIONED FOR EACH STREET AT EACH BLOCK. ALL RADII AT INTERSECTIONS SHALL BE VERIFIED AND DIMENSIONED. THIS INFORMATION TO CLEARLY INDICATE IT AS AS BEING "AS-BUILT" INFORMATION.
2. ROADWAY ELEVATIONS SHALL BE RECORDED AT ALL GRADE CHANGES OR OTHER INTERVALS AS NEEDED ALONG ALL STREETS. STREET CENTERLINE AND CURB INVERT ELEVATIONS SHALL BE RECORDED AS NOTED. THE "AS-BUILT" CENTERLINE PROFILE OF ALL STREETS SHALL ALSO BE SHOWN ON THE PLAN AND PROFILE SO IT MAY BE COMPARED TO THE EXISTING AND DESIGNED PROFILE GRADE LINES. ALL STREET CENTERLINES ON "AS-BUILTS" SHALL BE LABELED WITH STREET NAME AND RIGHT-OF-WAY WIDTH ON EVERY PAGE.
3. STORM DRAINAGE STRUCTURES SHALL BE LOCATED AND/OR DIMENSIONED FROM CENTERLINES OR LOT LINES AS APPROPRIATE.
4. STORM DRAINAGE PIPE INVERT AND STRUCTURE TOP AND BOTTOM ELEVATIONS SHALL BE RECORDED AND CLEARLY DENOTED AS "AS-BUILT" INFORMATION. DESIGN ELEVATIONS SHALL BE CROSSED OUT AND AS-BUILT INFORMATION WRITTEN NEXT TO IT.
5. STORM DRAINAGE PIPE MATERIAL, LENGTH, AND SIZE SHALL BE MEASURED AND/OR VERIFIED. THIS INFORMATION TO CLEARLY INDICATE IT AS BEING "AS-BUILT" INFORMATION.
6. ALL APPLICABLE TOPOGRAPHIC INFORMATION, PERTINENT TO THE ON SITE DRAINAGE SYSTEM SUCH AS DITCHES, LAKES, CANALS, ETC. THAT ARE DEEMED APPROPRIATE BY THE CITY SHALL BE NOTED. NORMALLY, RECORDING ELEVATIONS EVERY 100 FEET AT THE TOP OF BANK AND TOE OF SLOPE WILL BE REQUIRED. MEASUREMENTS SHALL BE TAKEN AND RECORDED IN ORDER TO ACCURATELY TIE DOWN THESE FEATURES TO THE ROADWAY CENTERLINES AND TO PLAT LINES. WHENEVER POSSIBLE, CONTOUR LINES SHALL BE UTILIZED TO GRAPHICALLY DESCRIBE THESE TOPOGRAPHIC FEATURES.
7. RETENTION AREAS SHALL HAVE THEIR TOP-OF-BANK AND BOTTOM ELEVATIONS RECORDED. ACTUAL MEASUREMENTS SHALL BE TAKEN AND DIMENSIONS RECORDED OF THE SIZE OF ALL RETENTION AREAS. MEASUREMENTS SHALL BE DONE FROM TOP-OF-BANK TO TOP-OF-BANK WITH SIDE SLOPES INDICATED. SEPARATE CALCULATIONS SHALL BE SUBMITTED TO INDICATE REQUIRED AND PROVIDED RETENTION VOLUMES.
8. STORM DRAINAGE SWALE CENTERLINES SHALL BE LOCATED AND ELEVATIONS OF FLOW LINE SHALL BE RECORDED EVERY 100 FEET.
9. SUBMIT CERTIFIED PAPER "AS-BUILTS" WITH REQUEST FOR FINAL INSPECTION. THREE SETS SHOWING STREETS & DRAINAGE FACILITIES. FOLLOWING FINAL INSPECTION AND COMMENTS, SUBMIT REVISED "AS-BUILTS" ALONG WITH REVISED/CERTIFIED MYLARS AND AUTO-CAD FILE. "AS-BUILT" DRAWINGS SHALL BE CERTIFIED BY A REGISTERED LAND SURVEYOR.

LEGAL DESCRIPTION:

LOT "D", OF GRANT LOT 10-1/2, EXCEPT THE WESTERLY 1267 FEET THEREOF, ASSESSOR'S SUBDIVISION OF THE HENRY YOUNG GRANT, OF RECORD IN MAP BOOK 2, PAGE 118, PUBLIC RECORDS OF VOLUSIA COUNTY, FLORIDA; AND

THE EASTERLY 1242 FEET OF THE WESTERLY 1267 FEET THE NORTHERLY 223 FEET OF LOT "F", GRANT LOT 10, AND THE EASTERLY 1242 FEET OF THE WESTERLY 1267 FEET OF LOT "D", GRANT LOT 10-1/2, ASSESSOR'S SUBDIVISION OF THE HENRY YONGE GRANT, ALSO KNOWN AS THE HENRY YOUNGE GRANT, AS PER MAP IN MAP BOOK 2, PAGE 118, PUBLIC RECORDS OF VOLUSIA COUNTY, FLORIDA; AND

THE EASTERLY 35 FEET OF THE WESTERLY 1302 FEET OF LOT "F", GRANT LOT 10, ASSESSOR'S SUBDIVISION OF THE HENRY YONGE GRANT, RECORDED IN MAP BOOK 2, PAGE 118, OF THE PUBLIC RECORDS OF VOLUSIA COUNTY, FLORIDA, EXCEPTING THEREFROM, THE SOUTHERLY 35 FEET THEREOF IN STERTHAUS AVENUE; AND

EASTERLY 841.93 FEET OF THE WESTERLY 2108.93 FEET OF LOT "D", GRANT LOT 11, AND THE WESTERLY 841.93 FEET OF LOT "C", GRANT LOT 10-1/2, ASSESSOR'S MAP OF THE HENRY YOUNGE GRANT, ACCORDING TO A PLAT RECORDED IN MAP BOOK 2, PAGE 118 OF THE PUBLIC RECORDS OF VOLUSIA COUNTY, FLORIDA,
LESS AND EXCEPT:

A PORTION OF LOT "C", GRANT LOT 10-1/2, ASSESSOR'S SUBDIVISION THE HENRY YOUNGE GRANT, RECORDED IN MAP BOOK 2, PAGE 118, OF THE PUBLIC RECORDS OF VOLUSIA COUNTY, FLORIDA, DESCRIBED AS FOLLOWS:

FROM THE SOUTHWEST CORNER OF GRANT LOT 10, SAID ASSESSOR'S SUBDIVISION OF THE HENRY YOUNGE GRANT, RUN NORTH 65°12'03" EAST ALONG THE SOUTH LINE OF SAID GRANT LOT 10 A DISTANCE OF 2178.96 FEET; THENCE DEPARTING SAID LINE, RUN NORTH 24°15'55" WEST A DISTANCE OF 35.00 FEET TO THE NORTHERLY RIGHT-OF-WAY LINE OF STERTHAUS DRIVE, A 50 FOOT RIGHT-OF-WAY; THENCE SOUTH 65°12'03" WEST ALONG SAID NORTHERLY RIGHT-OF-WAY LINE A DISTANCE OF 101.50 FEET; THENCE DEPARTING SAID RIGHT-OF-WAY LINE, RUN NORTH 24°47'57" WEST A DISTANCE OF 5.96 FEET TO THE P.C. OF A CURVE, CONCAVE SOUTHWEST, HAVING A RADIUS OF 372.90 FEET AND A CENTRAL ANGLE OF 12°38'08"; THENCE RUN NORTHERLY ALONG THE ARC OF SAID CURVE A DISTANCE OF 82.24 FEET; THENCE NORTH 37°26'05" WEST A DISTANCE OF 75.00 FEET TO THE P.C. OF A CURVE, CONCAVE NORTHEAST, HAVING A RADIUS OF 247.03 FEET, A CENTRAL ANGLE OF 14°44'44" AND A CHORD BEARING OF NORTH 30°03'43" WEST; THENCE RUN NORTHERLY ALONG THE ARC OF SAID CURVE A DISTANCE OF 63.58 FEET TO THE POINT OF BEGINNING; THENCE CONTINUE NORTHERLY ALONG THE ARC OF SAID CURVE, HAVING A RADIUS OF 247.03 FEET, A CENTRAL ANGLE OF 16°13'05" AND A CHORD BEARING OF NORTH 14°34'48" WEST; THENCE RUN NORTHERLY ALONG THE ARC OF SAID CURVE A DISTANCE OF 69.93 FEET; THENCE NORTH 06°28'15" WEST A DISTANCE OF 149.13 FEET TO THE P.C. OF A CURVE, CONCAVE SOUTHWEST, HAVING A RADIUS OF 159.90 FEET AND A CENTRAL ANGLE OF 17°46'50"; THENCE RUN NORTHERLY ALONG THE ARC OF SAID CURVE A DISTANCE OF 49.62 FEET TO THE WESTERLY LINE OF CENTER STREET, A 70 FOOT RIGHT-OF-WAY AS DESCRIBED IN OFFICIAL RECORDS BOOK 2402, PAGE 1046, OF THE PUBLIC RECORDS OF VOLUSIA COUNTY, FLORIDA; THENCE SOUTH 24°15'05" EAST ALONG SAID WESTERLY LINE A DISTANCE OF 258.89 FEET; THENCE DEPARTING SAID LINE RUN SOUTH 65°10'35" WEST A DISTANCE OF 64.89 FEET TO THE POINT OF BEGINNING; AND

THAT PORTION OF LOT "F", GRANT LOT 10, ASSESSORS SUBDIVISION OF THE HENRY YOUNGE GRANT, AS PER MAP RECORDED IN MAP BOOK 2, PAGE 118, OF THE PUBLIC RECORDS OF VOLUSIA COUNTY, FLORIDA, LYING WESTERLY OF THE WESTERLY RIGHT-OF-WAY LINE OF CENTER STREET, A 70 FEET RIGHT-OF-WAY, AS RECORDED IN OFFICIAL RECORDS BOOK 2402, PAGE 1046, OF THE PUBLIC RECORDS OF VOLUSIA COUNTY, FLORIDA. AND NORTHERLY OF STERTHAUS AVENUE, A 50 FOOT RIGHT-OF-WAY, EXCEPT THE WESTERLY 1302 FEET, AND BEING MORE PARTICULARLY DESCRIBED AS FOLLOWS:

COMMENCE AT THE INTERSECTION OF THE EASTERLY RIGHT-OF-WAY LINE OF OLD KINGS ROAD, A 50 FOOT RIGHT-OF- WAY, WITH THE NORTHERLY RIGHT-OF-WAY LINE OF SAID STERTHAUS AVENUE; THENCE NORTH 65°12'03" EAST, ALONG THE NORTHERLY RIGHT-OF-WAY LINE OF SAID STERTHAUS AVENUE, 1276.99 FEET TO THE POINT OF BEGINNING; THENCE NORTH 24°15'46" WEST, 223.56 FEET; THENCE NORTH 65°10'30" EAST, 742.13 FEET TO A POINT ON A CURVE CONCAVE TO THE EAST, BEING THE WESTERLY RIGHT-OF-WAY LINE OF SAID CENTER STREET, SAID CURVE HAVING A RADIUS OF 247.03 FEET, A CENTRAL ANGLE OF 14°44'44" AND A CHORD BEARING AND DISTANCE OF SOUTH 30°03'39" EAST 63.41 FEET; THENCE SOUTHERLY ALONG SAID CURVE 63.58 FEET TO A POINT OF TANGENCY; THENCE SOUTH 37°26'05" EAST 75.00 FEET TO A POINT OF CURVATURE OF A CURVE TO THE RIGHT HAVING A RADIUS OF 372.90 FEET, AND A CENTRAL ANGLE OF 12°38'08"; THENCE SOUTHERLY ALONG SAID CURVE 82.24 FEET TO A POINT OF TANGENCY; THENCE SOUTH 24°47'57" EAST 5.96 FEET TO THE SAID NORTHERLY RIGHT-OF-WAY LINE OF STERTHAUS AVENUE; THENCE SOUTH 65°12'03" WEST, ALONG SAID NORTHERLY RIGHT-OF-WAY LINE 775.48 FEET TO THE POINT OF BEGINNING.

LESS AND EXCEPT ANY PORTION OF THE ABOVE DESCRIBED PROPERTY LYING IN ROAD RIGHT OF WAY.

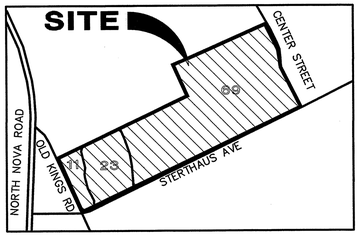

11 - BULOW SAND, 0 TO 5 PERCENT SLOPES
23 - FARMTON FINE SAND
69 - TUSCAWILLA FINE SAND

SOILS MAP

PARKER MYNCHENBERG & ASSOCIATES, INC.
PROFESSIONAL ENGINEERS * LANDSCAPE ARCHITECTS
1729 RIDGEWOOD AVENUE HOLLY HILL, FLORIDA 32117
(386) 677-6891 FAX (386) 677-2114
E-MAIL: info@parkermynchenberg.com
CERTIFICATE OF AUTHORIZATON NUMBER 00003910

CONCEPTUAL PLAN SUBMITTAL

NO.	DATE	DESCRIPTION	BY
		REVISIONS	

COVER SHEET

ORMOND RENAISSANCE CONDOMINIUM
ORMOND BEACH * FLORIDA

FILE NO. 13-49CS.DWG	DESIGNER: P.MYNCHENBERG
DATE: 12.12.13	CADD TECH: C.HARNDEN
SCALE: NONE	SHEET 1 OF 48

Parker Mynchenberg, P.E. — Digitally signed by Parker Mynchenberg, P.E. DN: cn=Parker Mynchenberg, P.E., o, ou, email=info@parkermynchenberg.com, c=US Date: 2014.02.26 11:33:50 -05'00'
SEAL

X:\Bruce Work\Bruce Work\RENAISSANCE\RENAISSANCE\CS-49CS.dwg, 2/27/2014 3:28:49 PM, HP Designjet T1100 44in HPGL2.pc3, Arch D (landscape), 1:1

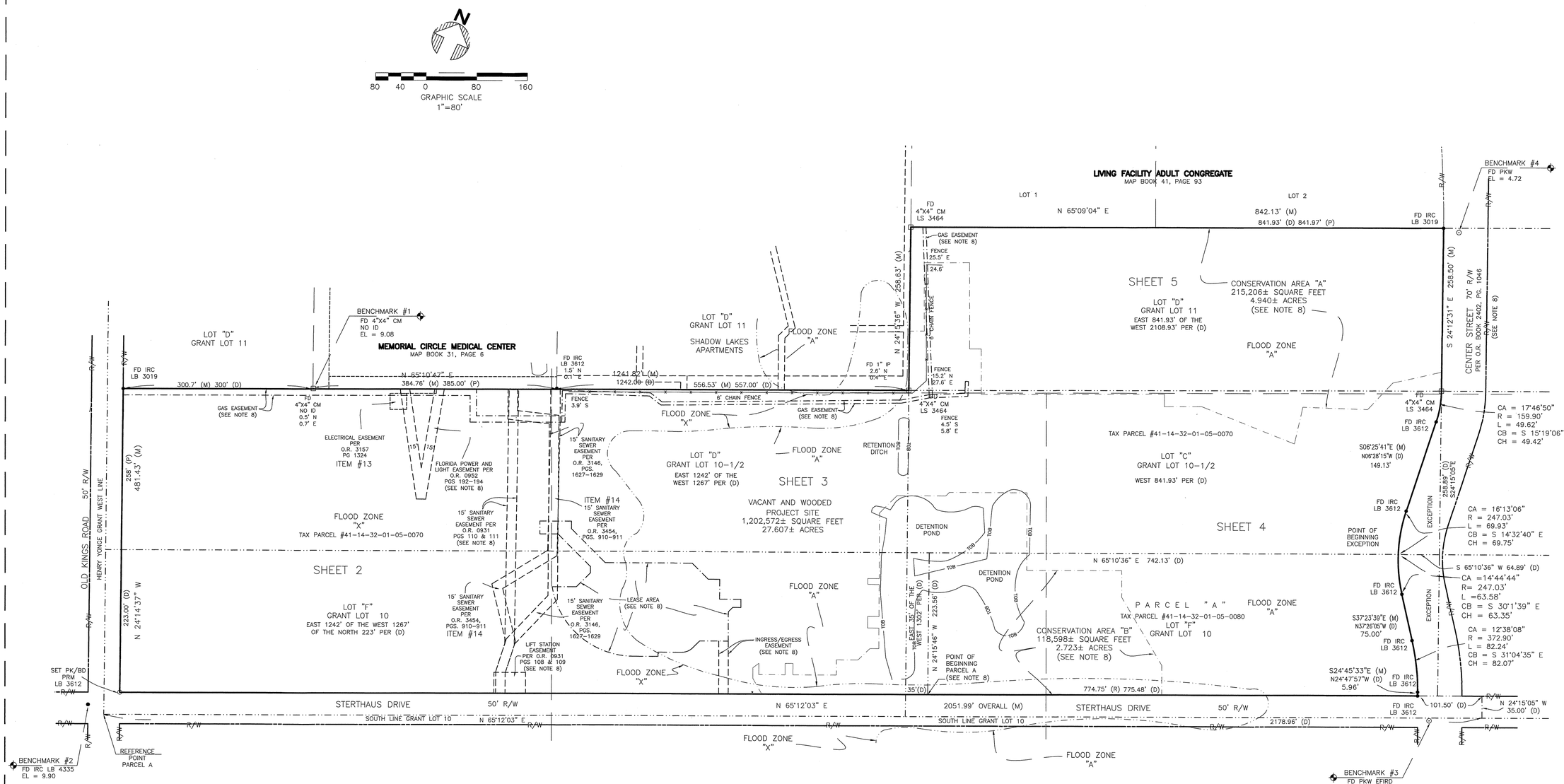

SHEET 1 OF 6

UPHAM INC
CIVIL ENGINEERING•SURVEYING•LANDSCAPE ARCHITECTURE
285 Kentucky Avenue • Ormond Beach • Florida 32174
Voice: 386.672.9515 • Fax: 386.673.6554 • uphaminc.com
LB # 0003612 LC # 0000357

THIS DRAWING IS THE PROPERTY OF UPHAM, INC. ANY USE OR REPRODUCTION IN WHOLE OR PART IS PROHIBITED WITHOUT THE EXPRESSED WRITTEN CONSENT OF UPHAM INC. COPYRIGHT 2009 ALL RIGHTS RESERVED

THIS MAP IS INTENDED TO BE DISPLAYED AT A SCALE OF 1" = 80 FEET OR SMALLER. ANY USE OF THIS FILE AT A SCALE LARGER THAN STATED SHALL BE AT THE USER'S OWN RISK.

SEE SHEET 6 OF 6 FOR SURVEYOR SIGNATURE

SURVEY MAP

THIS MAP IS NEITHER FULL NOR COMPLETE WITHOUT THE REPORT

TYPE OF SURVEY: BOUNDARY, TOPOGRAPHIC & SPECIAL PURPOSE

MAP SUBJECT: ORMOND KING CENTER

ADDRESS: 555 & 875 STERTHAUS AVENUE ORMOND BEACH, FL. 32174

PROJECT No:	130906
FIELD WORK BY:	WSH
DATE:	10/29/13
OFFICE WORK BY:	AM
DATE:	10/29/13
FIELD BOOK - PAGE:	52-26
SCALE:	1" = 80'
DRAWING FILE:	26B-144

X:\Bruce Work\Bruce Work\RENASSANCE\RENASSANCE\FROM SURVEYOR\15-11-070\MA-ORMOND KING CENTER_ENG.dwg 1/14/2014 10:22:00 AM, hp Designjet T1100 44in HPGL2.pc3, Arch D (Landscape), 1:1

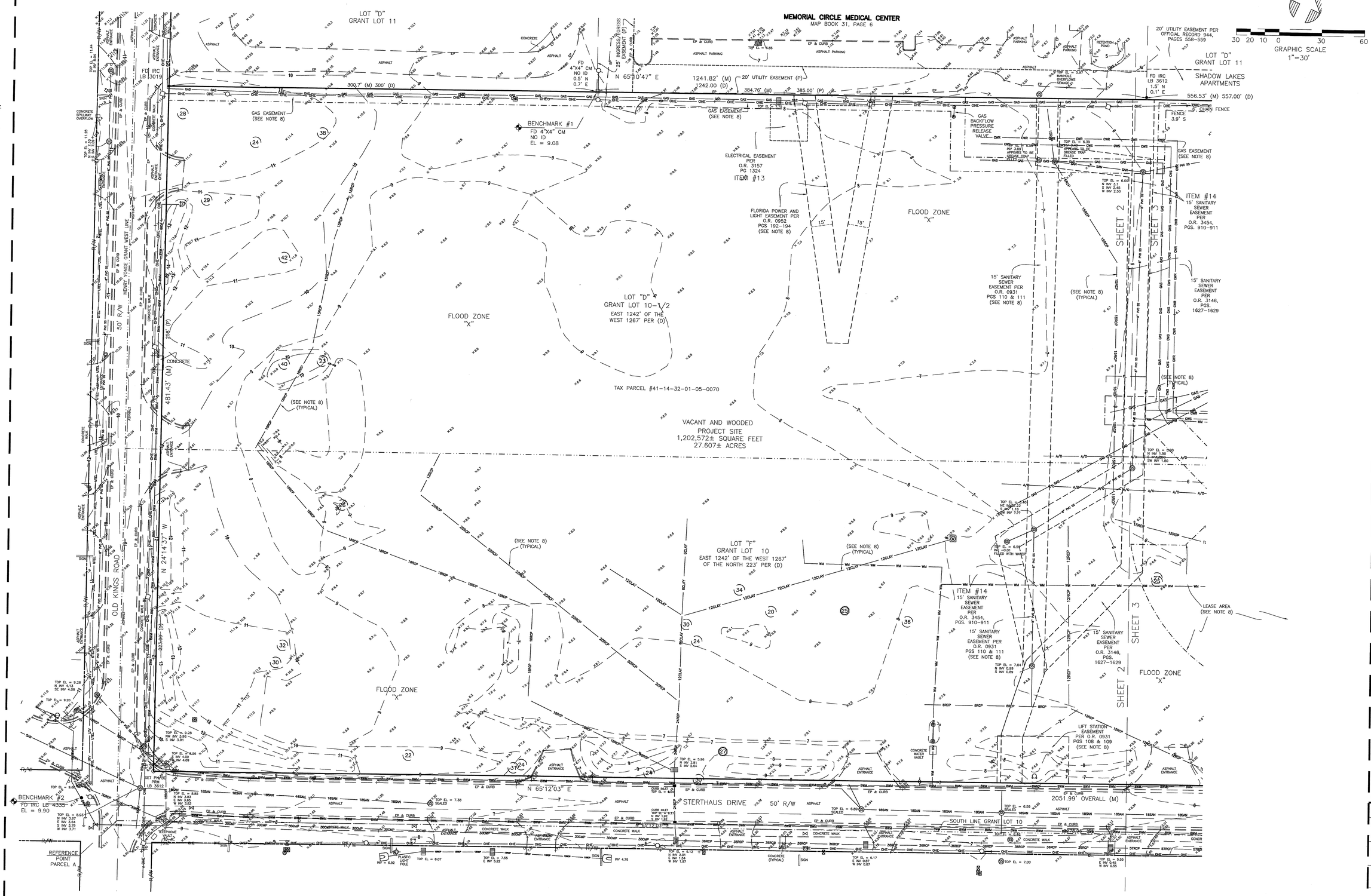

SHEET 2 OF 6

UPHAM
CIVIL ENGINEERING•SURVEYING•LANDSCAPE ARCHITECTURE
265 Kentlworth Avenue • Ormond Beach • Florida 32174
Voice: 386.672.9515 • Fax: 386.673.6554 • uphaminc.com
LB # 0000357

THIS DRAWING IS THE PROPERTY OF UPHAM, INC. ANY USE OR REPRODUCTION IN WHOLE OR PART IS PROHIBITED WITHOUT THE EXPRESSED WRITTEN CONSENT OF UPHAM INC. COPYRIGHT 2009 ALL RIGHTS RESERVED

THIS MAP IS INTENDED TO BE DISPLAYED AT A SCALE OF 1" = 30 FEET OR SMALLER. ANY USE OF THIS FILE AT A SCALE LARGER THAN STATED SHALL BE AT THE USER'S OWN RISK.

SEE SHEET 6 OF 6 FOR SURVEYOR SIGNATURE

SURVEY MAP

THIS MAP IS NEITHER FULL NOR COMPLETE WITHOUT THE REPORT

TYPE OF SURVEY:	BOUNDARY, TOPOGRAPHIC & SPECIAL PURPOSE
MAP SUBJECT:	ORMOND KING CENTER
ADDRESS:	555 & 875 STERTHAUS AVENUE ORMOND BEACH, FL. 32174
PROJECT No:	130906
FIELD WORK BY:	WSH
DATE:	10/29/13
OFFICE WORK BY:	AM
DATE:	10/29/13
FIELD BOOK - PAGE:	52-26
SCALE:	1" = 30'
DRAWING FILE:	26B-144

X:\Don Work\Data\PMA\DB\RENAISSANCE\FROM SURVEYOR\13-11-07\PMA-ORMOND KING CENTER.ENG.dwg, 12/12/2013 8:50:21 AM, 1:1

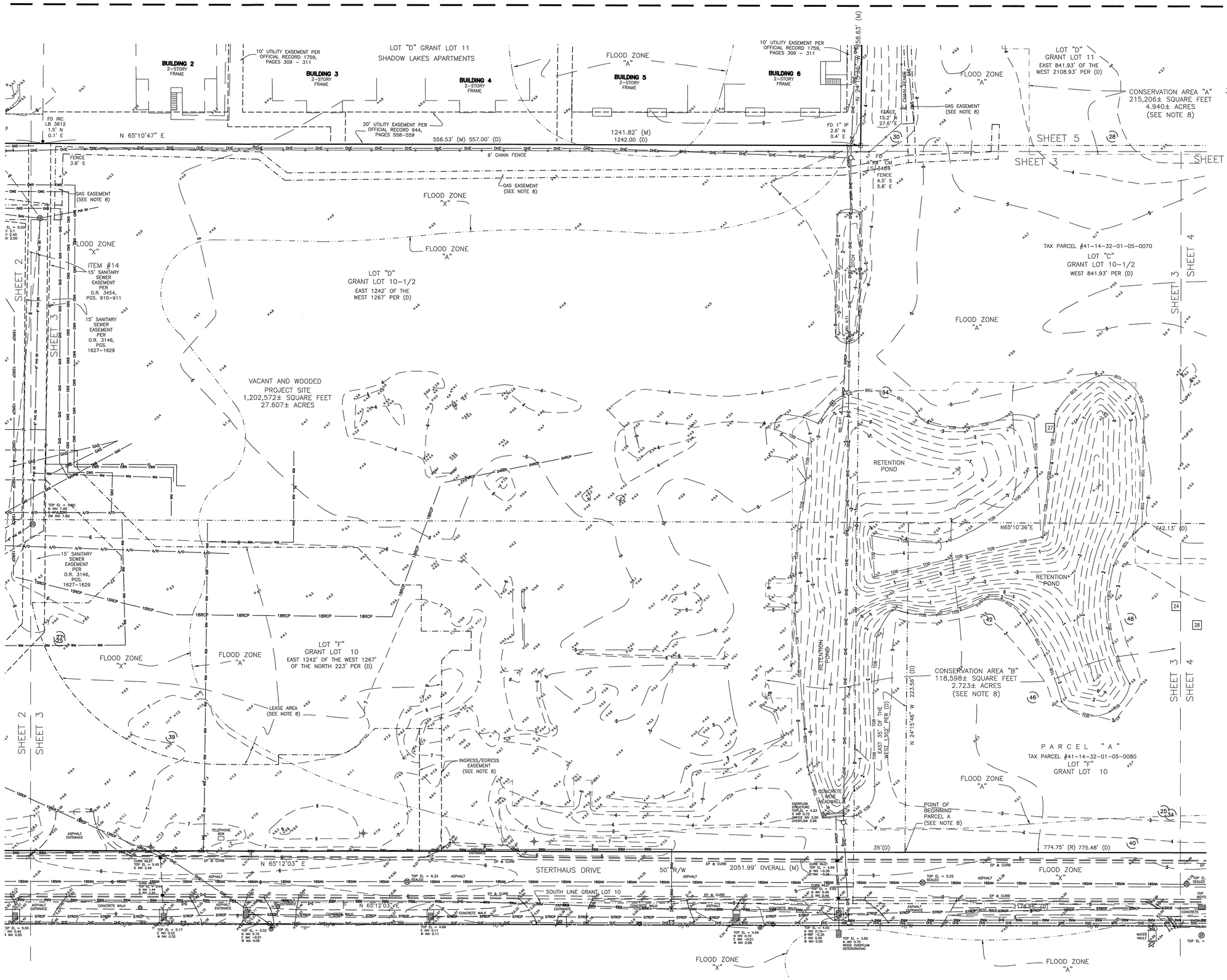

UPHAM INC.
CIVIL ENGINEERING·SURVEYING·LANDSCAPE ARCHITECTURE
285 Kenilworth Avenue • Ormond Beach • Florida 32174
Voice: 386.672.9515 • Fax: 386.673.6554 • uphaminc.com
LB # 0003612 LC # 0000357

THIS DRAWING IS THE PROPERTY OF UPHAM, INC. ANY USE OR REPRODUCTION IN WHOLE OR PART IS PROHIBITED WITHOUT THE EXPRESSED WRITTEN CONSENT OF UPHAM INC. COPYRIGHT 2009 ALL RIGHTS RESERVED

THIS MAP IS INTENDED TO BE DISPLAYED AT A SCALE OF 1" = 30 FEET OR SMALLER. ANY USE OF THIS FILE AT A SCALE LARGER THAN STATED SHALL BE AT THE USER'S OWN RISK.

SEE SHEET 6 OF 6 FOR SURVEYOR SIGNATURE

SURVEY MAP

THIS MAP IS NEITHER FULL NOR COMPLETE WITHOUT THE REPORT

TYPE OF SURVEY:	BOUNDARY, TOPOGRAPHIC & SPECIAL PURPOSE
MAP SUBJECT:	ORMOND KING CENTER
ADDRESS:	555 & 875 STERTHAUS AVENUE ORMOND BEACH, FL. 32174
PROJECT No:	130906
FIELD WORK BY:	WSH
DATE:	10/29/13
OFFICE WORK BY:	AM
DATE:	10/29/13
FIELD BOOK - PAGE:	52-26
SCALE:	1" = 30'
DRAWING FILE:	26B-144

X:\Don Work\Data\PMA\OB\RENASSANCE\FROM SURVEYOR\13-11-07\PMA-ORMOND KING CENTER.ENG.dwg, 12/12/2013 8:51:40 AM, 1:1

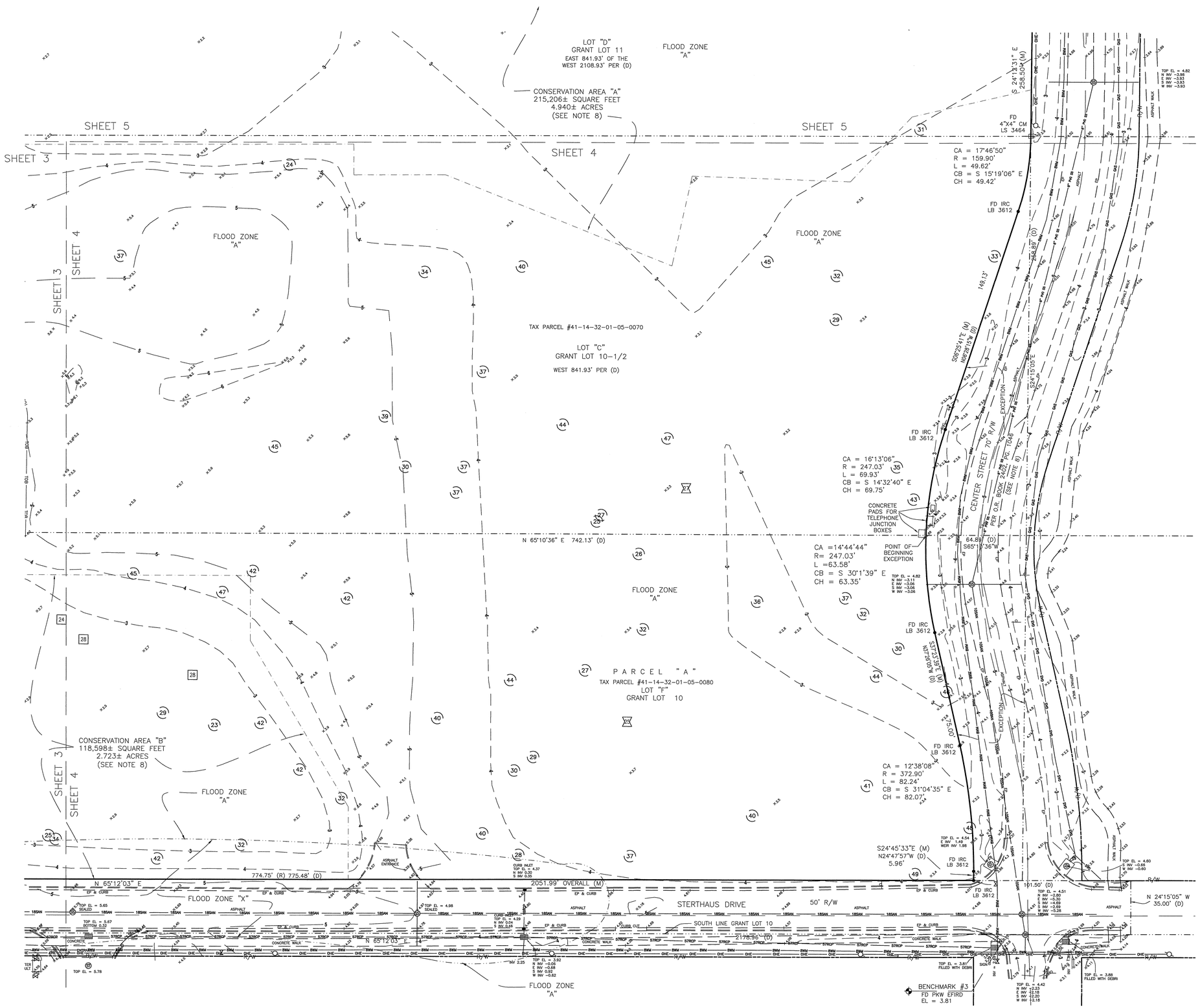

SHEET 4 OF 6

UPHAM
CIVIL ENGINEERING·SURVEYING·LANDSCAPE ARCHITECTURE
265 Kenilworth Avenue • Ormond Beach • Florida 32174
Voice: 386.672.9515 • Fax: 386.673.6554 • uphamino.com
LB # 0003612 LC # 0000357

THIS DRAWING IS THE PROPERTY OF UPHAM, INC. ANY USE OR REPRODUCTION IN WHOLE OR PART IS PROHIBITED WITHOUT THE EXPRESSED WRITTEN CONSENT OF UPHAM INC. COPYRIGHT 2009 ALL RIGHTS RESERVED

THIS MAP IS INTENDED TO BE DISPLAYED AT A SCALE OF 1" = 30 FEET OR SMALLER. ANY USE OF THIS FILE AT A SCALE LARGER THAN STATED SHALL BE AT THE USER'S OWN RISK.

SEE SHEET 6 OF 6 FOR SURVEYOR SIGNATURE

SURVEY MAP

THIS MAP IS NEITHER FULL NOR COMPLETE WITHOUT THE REPORT

TYPE OF SURVEY:	BOUNDARY, TOPOGRAPHIC & SPECIAL PURPOSE
MAP SUBJECT:	ORMOND KING CENTER
ADDRESS:	555 & 875 STERTHAUS AVENUE ORMOND BEACH, FL. 32174
PROJECT No:	130906
FIELD WORK BY:	WSH
DATE:	10/29/13
OFFICE WORK BY:	AM
DATE:	10/29/13
FIELD BOOK - PAGE:	52-26
SCALE:	1" = 30'
DRAWING FILE:	26B-144

X:\Dori Work\Data\PMA\OB\RENAISSANCE\FROM SURVEYOR\13-11-07\PMA-ORMOND KING CENTER.ENG.dwg, 12/12/2013 8:52:13 AM, 1:1

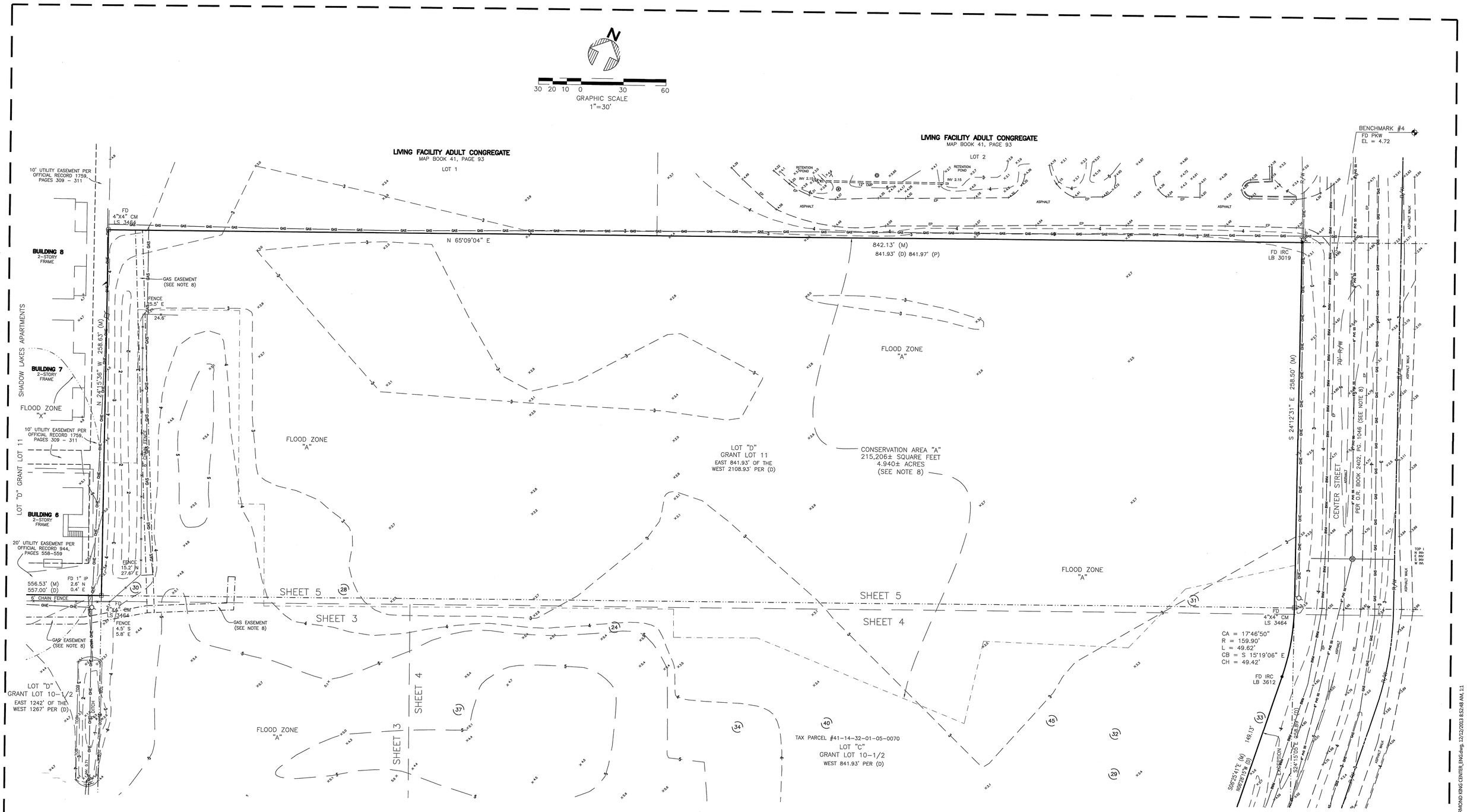

PROJECT No:	130906
FIELD WORK BY:	WSH
DATE:	10/29/2013
OFFICE WORK BY:	AM
DATE:	10/29/2013
FIELD BOOK - PAGE:	52-26
SCALE:	1"=30'

THIS MAP IS NEITHER FULL NOR COMPLETE WITHOUT THE REPORT

THIS MAP IS INTENDED TO BE DISPLAYED AT A SCALE OF 1" = 30 FEET OR SMALLER. ANY USE OF THIS FILE AT A SCALE LARGER THAN STATED SHALL BE AT THE USER'S OWN RISK.

SEE SHEET 6 OF 6 FOR SURVEYOR SIGNATURE

TYPE OF SURVEY:
BOUNDARY, TOPOGRAPHIC & SPECIAL PURPOSE

MAP SUBJECT:
ORMOND KING CENTER

ADDRESS:
555 & 875 STERTHAUS AVENUE
ORMOND BEACH, FL. 32174

SURVEY MAP

DRAWING FILE:
26B-144

THIS DRAWING IS THE PROPERTY OF UPHAM INC. REPRODUCTION IN WHOLE OR PART IS PROHIBITED WITHOUT THE EXPRESSED WRITTEN CONSENT OF UPHAM INC. COPYRIGHT 2009 ALL RIGHTS RESERVED

SHEET 5 OF 6

UPHAM INC
CIVIL ENGINEERING•SURVEYING•LANDSCAPE ARCHITECTURE
265 Kenilworth Avenue • Ormond Beach • Florida 32174
Voice: 386.672.9515 • Fax: 386.673.6554 • uphaminc.com
LB # 0003612 LC # 0000357

X:\Don Work\Data\PMA\OR\RENAISSANCE\FROM SURVEYOR\13-11-07\PMA-ORMOND KING CENTER_ENG.dwg, 12/12/2013 8:52:48 AM, 1:1

LEGAL DESCRIPTION:

LOT "D", OF GRANT LOT 10-1/2, EXCEPT THE WESTERLY 1267 FEET THEREOF, ASSESSOR'S SUBDIVISION OF THE HENRY YOUNG GRANT, OF RECORD IN MAP BOOK 2, PAGE 118, PUBLIC RECORDS OF VOLUSIA COUNTY, FLORIDA; AND

THE EASTERLY 1242 FEET OF THE WESTERLY 1267 FEET THE NORTHERLY 223 FEET OF LOT "F", GRANT LOT 10, AND THE EASTERLY 1242 FEET OF THE WESTERLY 1267 FEET OF LOT "D", GRANT LOT 10-1/2, ASSESSOR'S SUBDIVISION OF THE HENRY YONGE GRANT, ALSO KNOWN AS THE HENRY YOUNGE GRANT, AS PER MAP IN MAP BOOK 2, PAGE 118, PUBLIC RECORDS OF VOLUSIA COUNTY, FLORIDA; AND

THE EASTERLY 35 FEET OF THE WESTERLY 1302 FEET OF LOT "F", GRANT LOT 10, ASSESSOR'S SUBDIVISION OF THE HENRY YONGE GRANT, RECORDED IN MAP BOOK 2, PAGE 118, OF THE PUBLIC RECORDS OF VOLUSIA COUNTY, FLORIDA, EXCEPTING THEREFROM, THE SOUTHERLY 35 FEET THEREOF IN STERTHAUS AVENUE; AND

EASTERLY 841.93 FEET OF THE WESTERLY 2108.93 FEET OF LOT "D", GRANT LOT 11, AND THE WESTERLY 841.93 FEET OF LOT "C", GRANT LOT 10-1/2, ASSESSOR'S MAP OF THE HENRY YOUNGE GRANT, ACCORDING TO A PLAT RECORDED IN MAP BOOK 2, PAGE 118 OF THE PUBLIC RECORDS OF VOLUSIA COUNTY, FLORIDA, LESS AND EXCEPT:

A PORTION OF LOT "C", GRANT LOT 10-1/2, ASSESSOR'S SUBDIVISION THE HENRY YOUNGE GRANT, RECORDED IN MAP BOOK 2, PAGE 118, OF THE PUBLIC RECORDS OF VOLUSIA COUNTY, FLORIDA, DESCRIBED AS FOLLOWS:

FROM THE SOUTHWEST CORNER OF GRANT LOT 10, SAID ASSESSOR'S SUBDIVISION OF THE HENRY YOUNGE GRANT, RUN NORTH 65°12'03" EAST ALONG THE SOUTH LINE OF SAID GRANT LOT 10 A DISTANCE OF 2178.96 FEET; THENCE DEPARTING SAID LINE, RUN NORTH 24°15'05" WEST A DISTANCE OF 35.00 FEET TO THE NORTHERLY RIGHT-OF-WAY LINE OF STERTHAUS DRIVE, A 50 FOOT RIGHT-OF-WAY; THENCE SOUTH 65°12'03" WEST ALONG SAID NORTHERLY RIGHT-OF-WAY LINE A DISTANCE OF 101.50 FEET; THENCE DEPARTING SAID RIGHT-OF-WAY LINE, RUN NORTH 24°47'57" WEST A DISTANCE OF 5.96 FEET TO THE P.C. OF A CURVE, CONCAVE SOUTHWEST, HAVING A RADIUS OF 372.90 FEET AND A CENTRAL ANGLE OF 12°38'08"; THENCE RUN NORTHERLY ALONG THE ARC OF SAID CURVE A DISTANCE OF 82.24 FEET; THENCE NORTH 37°26'05" WEST A DISTANCE OF 75.00 FEET TO THE P.C. OF A CURVE, CONCAVE NORTHEAST, HAVING A RADIUS OF 247.03 FEET, A CENTRAL ANGLE OF 14°44'44" AND A CHORD BEARING OF NORTH 30°03'43" WEST; THENCE RUN NORTHERLY ALONG THE ARC OF SAID CURVE A DISTANCE OF 63.58 FEET TO THE POINT OF BEGINNING; THENCE CONTINUE NORTHERLY ALONG THE ARC OF SAID CURVE, HAVING A RADIUS OF 247.03 FEET, A CENTRAL ANGLE OF 16°13'06" AND A CHORD BEARING OF NORTH 14°34'48" WEST; THENCE RUN NORTHERLY ALONG THE ARC OF SAID CURVE A DISTANCE OF 69.93 FEET; THENCE NORTH 06°28'15" WEST A DISTANCE OF 149.13 FEET TO THE P.C. OF A CURVE, CONCAVE SOUTHWEST, HAVING A RADIUS OF 159.90 FEET AND A CENTRAL ANGLE OF 17°46'50"; THENCE RUN NORTHERLY ALONG THE ARC OF SAID CURVE A DISTANCE OF 49.62 FEET TO THE WESTERLY LINE OF CENTER STREET, A 70 FOOT RIGHT-OF-WAY AS DESCRIBED IN OFFICIAL RECORDS BOOK 2402, PAGE 1046, OF THE PUBLIC RECORDS OF VOLUSIA COUNTY, FLORIDA; THENCE SOUTH 24°15'05" EAST ALONG SAID WESTERLY LINE A DISTANCE OF 258.89 FEET; THENCE DEPARTING SAID LINE RUN SOUTH 65°10'36" WEST A DISTANCE OF 64.89 FEET TO THE POINT OF BEGINNING; AND

THAT PORTION OF LOT "F", GRANT LOT 10, ASSESSORS SUBDIVISION OF THE HENRY YOUNGE GRANT, AS PER MAP RECORDED IN MAP BOOK 2, PAGE 118, OF THE PUBLIC RECORDS OF VOLUSIA COUNTY, FLORIDA, LYING WESTERLY OF THE WESTERLY RIGHT-OF-WAY LINE OF CENTER STREET, A 70 FEET RIGHT-OF-WAY, AS RECORDED IN OFFICIAL RECORDS BOOK 2402, PAGE 1046, OF THE PUBLIC RECORDS OF VOLUSIA COUNTY, FLORIDA. AND NORTHERLY OF STERTHAUS AVENUE, A 50 FOOT RIGHT-OF-WAY, EXCEPT THE WESTERLY 1302 FEET, AND BEING MORE PARTICULARLY DESCRIBED AS FOLLOWS:

COMMENCE AT THE INTERSECTION OF THE EASTERLY RIGHT-OF-WAY LINE OF OLD KINGS ROAD, A 50 FOOT RIGHT-OF- WAY, WITH THE NORTHERLY RIGHT-OF-WAY LINE OF SAID STERTHAUS AVENUE; THENCE NORTH 65°12'03" EAST, ALONG THE NORTHERLY RIGHT-OF-WAY LINE OF SAID STERTHAUS AVENUE, 1276.99 FEET TO THE POINT OF BEGINNING; THENCE NORTH 24°15'46" WEST, 223.56 FEET; THENCE NORTH 65°10'36" EAST, 742.13 FEET TO A POINT ON A CURVE CONCAVE TO THE EAST, BEING THE WESTERLY RIGHT-OF-WAY LINE OF SAID CENTER STREET, SAID CURVE HAVING A RADIUS OF 247.03 FEET, A CENTRAL ANGLE OF 14°44'44" AND A CHORD BEARING AND DISTANCE OF SOUTH 30°03'39" EAST 63.41 FEET; THENCE SOUTHERLY ALONG SAID CURVE 63.58 FEET TO A POINT OF TANGENCY; THENCE SOUTH 37°26'05" EAST 75.00 FEET TO A POINT OF CURVATURE OF A CURVE TO THE RIGHT HAVING A RADIUS OF 372.90 FEET, AND A CENTRAL ANGLE OF 12°38'08"; THENCE SOUTHERLY ALONG SAID CURVE 82.24 FEET TO A POINT OF TANGENCY; THENCE SOUTH 24°47'57" EAST 5.96 FEET TO THE SAID NORTHERLY RIGHT-OF-WAY LINE OF STERTHAUS AVENUE; THENCE SOUTH 65°12'03" WEST, ALONG SAID NORTHERLY RIGHT-OF-WAY LINE 775.48 FEET TO THE POINT OF BEGINNING.

LESS AND EXCEPT ANY PORTION OF THE ABOVE DESCRIBED PROPERTY LYING IN ROAD RIGHT OF WAY.

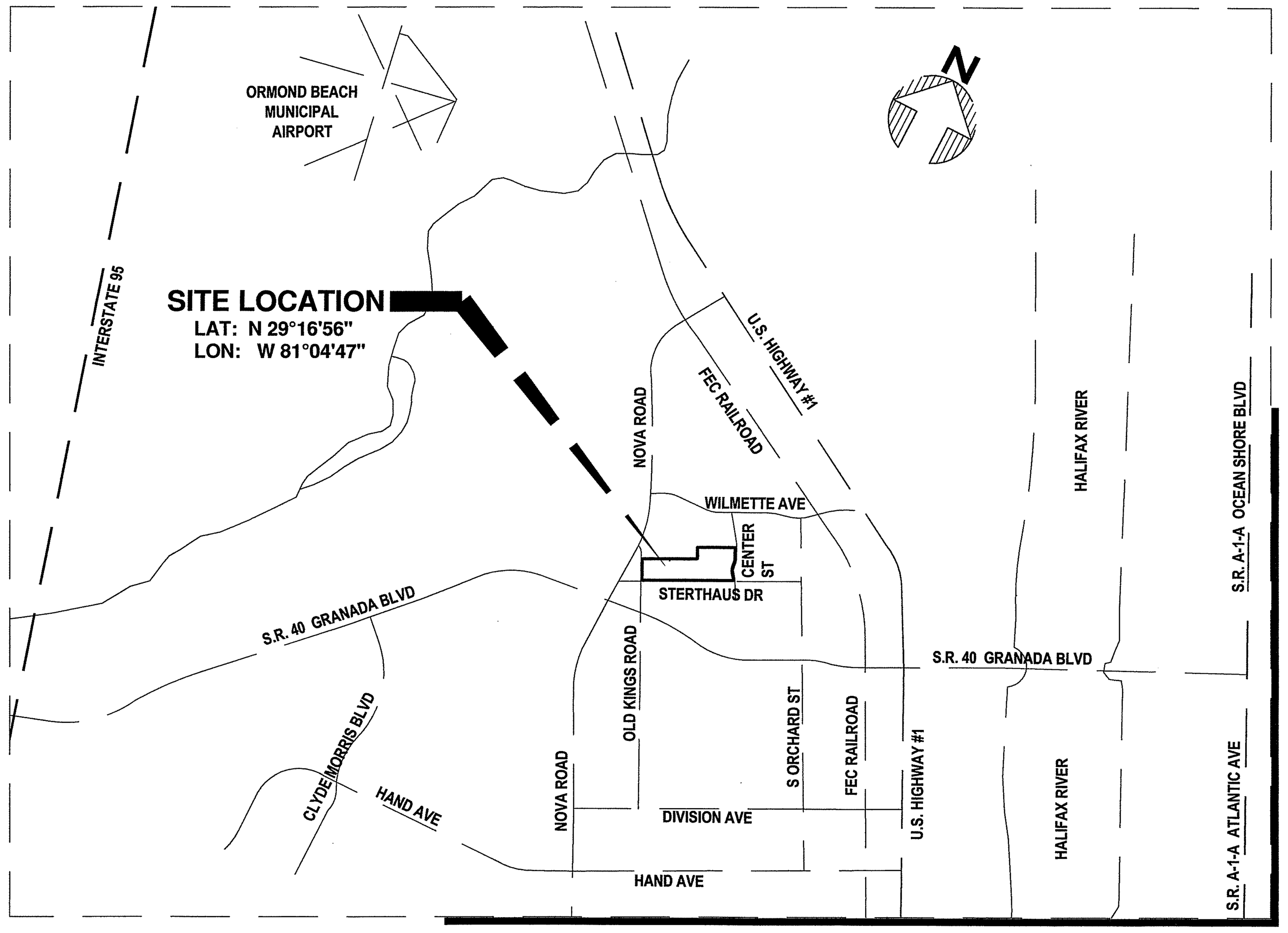

LOCATION MAP

TREE LEGEND / SYMBOLS / COUNT

SEE LIMITATIONS: 12(F)(1)
ONLY TREES 24" AND GREATER WERE LOCATED

CEDAR TREE	29
OAK TREE	36
PINE TREE	28
SWEETGUM TREE	25

GENERAL NOTES AND SURVEY REPORT:

1. BEARING STRUCTURE (N 65°12'03" E) ALONG THE SOUTHERLY LINE OF GRANT LOT 10-1/2, ASSESSOR'S MAP OF THE HENRY YOUNGE GRANT, ACCORDING TO A PLAT RECORDED IN MAP BOOK 2, PAGE 118 OF THE PUBLIC RECORDS OF VOLUSIA COUNTY, FLORIDA. PER TITLE COMMITMENT BY CHICAGO TITLE INSURANCE COMPANY, ORDER NO. 4189361, DATED DECEMBER 17, 2012, 8:00 a.m., EXHIBIT "A", ALSO RECORDED IN OFFICIAL RECORD BOOK 6818, PAGES 1405 THROUGH 1407, PUBLIC RECORDS OF VOLUSIA COUNTY, FLORIDA.

2. LEGAL DESCRIPTION PROVIDED BY CHICAGO TITLE INSURANCE COMPANY, ORDER NO. 4189361, DATED DECEMBER 17, 2012, 8:00 a.m., EXHIBIT "A", ALSO RECORDED IN OFFICIAL RECORD BOOK 6818, PAGES 1405 THROUGH 1407, PUBLIC RECORDS OF VOLUSIA COUNTY, FLORIDA..

3. RECORD DIMENSIONS ARE SHOWN IN PARENTHESIS ( ), WHEN DIFFERS FROM MEASURED.

4. FLOOD PLANE CERTIFICATION ACCORDING TO THE FEMA (FEDERAL EMERGENCY MANAGEMENT AGENCY) F.I.R.M (FEDERAL INSURANCE RATE MAP), COMMUNITY OF CITY OF ORMOND BEACH NUMBER 125136, PANEL NUMBER 12127C0212 H, DATED: FEBRUARY 19, 2003 AND PANEL NUMBER 12127C0214 H, DATED: FEBRUARY 19, 2003. THE PROPERTY APPEARS TO BE FLOOD ZONE "X" AND "A" THE BASE 100 YEAR FLOOD ELEVATION IS NONE.

5. ACCURACY STATEMENT: THE EXPECTED ACCURACY OF THE CONTROL TO ESTABLISH THE BOUNDARY OF THE SUBJECT PROPERTY IS. THE CLOSURE OF THE TRAVERSE FOR THIS PROJECT IS : 1 : 563,000

6. DATA SOURCES:
VERTICAL DATA
ELEVATIONS REFER TO (NAVD 88) NORTH AMERICAN VERTICAL DATUM 1988. FEET AND DECIMAL PART THEREOF.
BENCHMARK REFERENCE NAVD DATUM OF 1988. BENCHMARK, DESIGNATION IS CITY OF ORMOND BEACH HV MONUMENT (UPHAM) ELEVATION 4.88 FEET.

   A.) BENCHMARK #1 FOUND 4"X4" CONCRETE MONUMENT NO ID ELEVATION = 9.08
   B.) BENCHMARK #2 FOUND IRON ROD & CAP LB4335 ELEVATION = 9.90
   C.) BENCHMARK #3 FOUND PARKER KALON NAIL & DISK EFIRD ELEVATION = 3.81
   D.) BENCHMARK #4 SET PARKER KALON NAIL & DISK NO ID ELEVATION = 4.72

7. MEASUREMENT METHODS: HORIZONTAL AND VERTICAL MEASURES MADE BY ONE OR MORE OF THE FOLLOWING INSTRUMENTS: TOPCON INSTRUMENTS GPT-3003W, SOKKIA GRX-1 GPS INSTRUMENTS, PAL-2 LUFKIN STEEL TAPE, CST STEEL TAPE, STEEL HIGHWAY CHAIN, CST & LUFKIN FIBERGLASS TAPE FOR DIMENSIONS FOR BUILDINGS.

8. HISTORY REFERENCE TO PREVIOUS SURVEY OR HELPER SURVEYS:
   A.) UPHAM INC., BOUNDARY SURVEY FILE 26B-141, DATED APRIL 12,1993.
   B.) UPHAM INC., BOUNDARY SURVEY FILE 26B-132C, DATED JANUARY 24, 1999.
   C.) UPHAM INC., SPECIAL PURPOSE SURVEY FILE 26B-131, DATED MAY 4, 1998.
   D.) UPHAM INC., CIVIL ENGINEERING DRAWING, OVERALL PLAN, PROJECT 255301, DATED JUNE 24, 1993.

9. LINEAGE OF DATA HORIZONTAL DATA REFERENCES, DATE OF ORIGINAL PLAT.
   A.) MAP OF HENRY YOUNGE, AS RECORDED IN MAP BOOK 2, PAGE 118, ALSO RECORDED IN MAP BOOK 12, PAGE 24, PUBLIC RECORDS OF VOLUSIA COUNTY, FLORIDA.
   B.) MEMORIAL CIRCLE MEDICAL CENTER, AS RECORDED IN MAP BOOK 31, PAGE 6, PUBLIC RECORDS OF VOLUSIA COUNTY, FLORIDA.
   C.) ADULT CONGREGATE LIVING FACILITY, AS RECORDED IN MAP BOOK 41, PAGES 93 & 94, PUBLIC RECORDS OF VOLUSIA COUNTY, FLORIDA.

10. UNDERGROUND UTILITIES NOT LOCATED AND NOT SHOWN.

11. TITLE INFORMATION PROVIDED BY CHICAGO TITLE INSURANCE COMPANY, ORDER NO. 4189361, DATED DECEMBER 17, 2012, 8:00 a.m.
SCHEDULE B, SECTION 2:
ITEMS:

   6. STATE ROAD RIGHT OF WAY RESERVED UNTO THE STATE OF FLORIDA IN THE DEED NO. 1336 FROM THE TRUSTEES OF THE INTERNAL IMPROVEMENT FUND, DATED AUGUST 11, 1943, RECORDED SEPTEMBER 8, 1943 IN DEED BOOK 306, PAGE 178; AS AFFECTED BY AFFIDAVIT RECORDED IN OFFICIAL RECORDS BOOK 2615, PAGE 193, PUBLIC RECORDS OF VOLUSIA COUNTY, FLORIDA. NOT PROVIDED TO THIS SURVEYOR.
   7. EASEMENT TO FLORIDA POWER & LIGHT COMPANY RECORDED IN DEED BOOK 446, PAGE 22, PUBLIC RECORDS OF VOLUSIA COUNTY, FLORIDA. NOT PROVIDED TO THIS SURVEYOR
   8. EASEMENT TO FLORIDA POWER & LIGHT COMPANY RECORDED IN DEED BOOK 446, PAGE 27, PUBLIC RECORDS OF VOLUSIA COUNTY, FLORIDA. NOT PROVIDED TO THIS SURVEYOR
   9. RESTRICTIVE COVENANTS AS SET FORTH IN THAT CERTAIN DEED RECORDED IN OFFICIAL RECORDS BOOK 441, PAGE 352, PUBLIC RECORDS OF VOLUSIA COUNTY, FLORIDA. NOT PROVIDED TO THIS SURVEYOR
   10. EASEMENT DEED TO FLORIDA POWER & LIGHT COMPANY RECORDED IN OFFICIAL RECORDS BOOK 931, PAGE 108, PUBLIC RECORDS OF VOLUSIA COUNTY, FLORIDA. NOT PROVIDED TO THIS SURVEYOR
   11. EASEMENT TO FLORIDA POWER & LIGHT COMPANY RECORDED IN OFFICIAL RECORDS BOOK 3157, PAGE 1324, PUBLIC RECORDS OF VOLUSIA COUNTY, FLORIDA .PLOTTED ON SURVEY AS SHOWN.
   12. EASEMENT DEED TO THE CITY OF ORMOND BEACH RECORDED IN OFFICIAL RECORDS BOOK 3454, PAGE 910, PUBLIC RECORDS OF VOLUSIA COUNTY, FLORIDA. PLOTTED ON SURVEY AS SHOWN.
   13. DEED OF CONSERVATION EASEMENT TO THE CITY OF ORMOND BEACH RECORDED IN OFFICIAL RECORDS BOOK 3862, PAGE 1552, PUBLIC RECORDS OF VOLUSIA COUNTY, FLORIDA. NOT PROVIDED TO THIS SURVEYOR
   14. DECLARATION OF COVENANTS AND RESTRICTIONS RECORDED IN OFFICIAL RECORDS BOOK 3862, PAGE 1558, PUBLIC RECORDS OF VOLUSIA COUNTY, FLORIDA. NOT PROVIDED TO THIS SURVEYOR
   15. UNITY OF TITLE AGREEMENT RECORDED IN OFFICIAL RECORDS BOOK 3862, PAGE 1563, PUBLIC RECORDS OF VOLUSIA COUNTY, FLORIDA.NOT PROVIDED TO THIS SURVEYOR
   16. EASEMENT TO FLORIDA POWER & LIGHT COMPANY RECORDED IN OFFICIAL RECORDS BOOK 3924, PAGE 4311, PUBLIC RECORDS OF VOLUSIA COUNTY, FLORIDA. NOT PROVIDED TO THIS SURVEYOR
   17. GRANT OF NON-EXCLUSIVE UTILITY EASEMENT TO PEOPLES GAS SYSTEM, A DIVISION OF TAMPA ELECTRIC COMPANY RECORDED IN OFFICIAL RECORDS BOOK 4339, PAGE 678, PUBLIC RECORDS OF VOLUSIA COUNTY, FLORIDA. NOT PROVIDED TO THIS SURVEYOR
   18. CITY OF ORMOND BEACH RESOLUTION NO. 2003-16 RECORDED IN OFFICIAL RECORDS BOOK 5014, PAGE 2531; AND FIRST AMENDED CONDITIONAL USE PERMIT RECORDED IN OFFICIAL RECORDS BOOK 5014, PAGE 2536, PUBLIC RECORDS OF VOLUSIA COUNTY, FLORIDA. NOT PROVIDED TO THIS SURVEYOR
   19. MEMORANDUM OF LEASE WITH VOICESTREAM TAMPA/ORLANDO, INC. RECORDED IN OFFICIAL RECORDS BOOK 5295, PAGE 4580, PUBLIC RECORDS OF VOLUSIA COUNTY, FLORIDA. NOT PROVIDED TO THIS SURVEYOR
   20. TERMS, COVENANTS, CONDITIONS AND OTHER MATTERS CONTAINED IN ANY UNRECORDED LEASE(S) AND ALL RIGHTS THEREUNDER OF THE LESSEE(S) AND OF ANY PERSON CLAIMING BY, THROUGH OR UNDER THE LESSEE(S).NOT PROVIDED TO THIS SURVEYOR
   21. CITY OF ORMOND BEACH ORDINANCE NO. 2009-67, RECORDED DECEMBER 23, 2009, OFFICIAL RECORDS BOOK 6430, PAGE 1773. NOT PROVIDED TO THIS SURVEYOR

   EASEMENT DEED TO THE CITY OF ORMOND BEACH RECORDED IN OFFICIAL RECORDS BOOK 3146, PAGE 1627, PUBLIC RECORDS OF VOLUSIA COUNTY, FLORIDA. PLOTTED ON SURVEY AS SHOWN.

12. LIMITATIONS:
A.) SOME INSTRUMENTS OF RECORD REFLECTING EASEMENTS, RIGHT-OF-WAY AND OR OWNERSHIP WERE FURNISHED TO THIS SURVEYOR PER TITLE INFORMATION PROVIDED BY CHICAGO TITLE INSURANCE COMPANY, ORDER NO. 4189361, DATED DECEMBER 17, 2012, 8:00 a.m., AS SHOWN. THERE MAY BE ADDITIONAL RESTRICTIONS AND/OR OTHER MATTERS THAT ARE NOT SHOWN ON THIS PLAT OF SURVEY THAT MAY BE FOUND IN THE PUBLIC RECORDS OF THIS COUNTY, NO UNDERGROUND INSTALLATIONS OR IMPROVEMENTS HAVE BEEN LOCATED EXCEPT AS SHOWN. IF LOCATION OF EASEMENTS OR RIGHT-OF-WAY OF RECORD, OTHER THAN THOSE ON RECORD PLATS, IS REQUIRED, THIS INFORMATION MUST BE FURNISHED TO THE SURVEYOR AND MAPPER. PER FLORIDA STATUES RULE 5J-17.052(2)(d)(4)

B.) IT IS UNDERSTOOD TO BE THE PROFESSIONAL OPINION OF THIS SURVEYOR AND THE FIRM, FROM WHICH IS FORMULATED ON HIS BEST KNOWLEDGE, INFORMATION AND BELIEF, AND AS SUCH, DOES NOT CONSTITUTE A GUARANTEE OR WARRANTY, EITHER EXPRESSED OR IMPLIED. FURTHERMORE, THIS SURVEYOR AND FIRM, DOES NOT ASSUME RESPONSIBILITY AND SHALL NOT BE LIABLE FOR CLAIMS ARISING FROM ERRONEOUS OR INCORRECT INFORMATION FURNISHED BY THE OWNER, LENDER, OR OWNER'S CONTRACTORS OR OTHERS, WHICH IS USED AS A BASIS TO FORMULATE THIS SURVEYOR'S OPINION.

C.) ADDITIONS OR DELETIONS TO SURVEY MAPS OR REPORTS BY OTHER THAN THE SIGNING PARTY IS PROHIBITED WITHOUT WRITTEN CONSENT OF THE PARTY. PER FLORIDA STATUTES CHAPTER RULE 5J-17.051(3)(b(6)

D.) THE ACCEPTANCE OF THIS SURVEY AS CERTIFIED FOR THE EXCLUSIVE USE OF NAMES SHOWN HEREON SHALL CONSTITUTE FULFILLMENT OF MY CONTRACTUAL OBLIGATION. ADDITIONAL SEALED ORIGINALS MAY BE PURCHASED UP TO SIX MONTHS AFTER THE DATE OF THE INVOICE. "ORIGINAL" AS DEFINED HEREON REFERS TO THE SIGNED AND SEALED GRAPHIC REPRESENTATION OF THE FIELD SURVEY. CAD FILES ARE NOT THE SURVEY AND THERE WILL BE A SURCHARGE FOR THEM.

E.) TAX PARCEL IDENTIFICATION NUMBERS, ADJACENT OWNERS NAMES AND ADDRESS WHEN SHOWN SHOWN IS EITHER SUPPLIED BY CLIENT AND/OR TAKEN FROM COUNTY APPRAISER'S INTERNET WEB PAGE AND MAY NOT BE THE MOST CURRENT.

F.) SPECIAL PURPOSE SURVEYS WHEN IDENTIFIED AS TYPE OF SURVEY:
   1.) WHEN TREES AS SHOWN ON THE SURVEY IT IS FOR THE LOCATION OF THE TREES 24" INCHES DIAMETER AND ABOVE TREES TAKEN APPROXIMATELY 4 TO 4-1/2 FEET ABOVE GROUND LEVEL TREE IDENTIFICATION OTHER THAN LOCATION AND SIZE, SEE AN ARBORIST.
   2.) JURISDICTIONAL WETLANDS WHEN SHOWN WERE LOCATED FROM FLAGS/MARKS BY BIOLOGIST / ENVIRONMENTALIST. AND THE DETERMINATION OF WETLANDS ARE OUT OF THE EXPERTISE OF THIS SURVEYOR AND MAPPER.
   3.) ARCHAEOLOGICAL FEATURES WHEN SHOWN WERE LOCATED FROM OBJECTS IDENTIFIED BY OTHERS AND THE DETERMINATION OF WHAT CONSTITUTES A ARCHAEOLOGICAL FEATURES IS OUT OF THE EXPERTISE OF THIS SURVEYOR AND MAPPER.
   4.) WILDLIFE CORRIDORS OR HABITATS WHEN SHOWN WERE LOCATED FROM OBJECTS IDENTIFIED BY OTHERS AND THE DETERMINATION OF WHAT CONSTITUTES A WILDLIFE CORRIDORS OR HABITATS IS OUT OF THE EXPERTISE OF THIS SURVEYOR AND MAPPER.
   5.) GEOTECHNICAL BORINGS SHOWN AS MARKED AND FIELD LOCATED.

G.) AS-BUILT / RECORD SURVEYS WHEN IDENTIFIED AS TYPE OF SURVEY:
   1.) WHEN UNDERGROUND UTILITIES, SUCH AS UNDERGROUND CABLES, GAS MAINS, WATER MAINS, SANITARY SEWER SYSTEMS AND STORM COLLECTIONS SYSTEMS ARE SHOWN. THE LIMITS OF THIS SURVEY INCLUDE VISIBLE STRUCTURES / IMPROVEMENTS IN COMBINATION WITH AS-BUILT / RECORD DRAWINGS SUPPLIED BY OTHERS.
   2.) WHEN THE PERCENTAGE OF SLOPES ARE SHOWN IT IS BASED ON THE INVERTS BETWEEN VISIBLE STRUCTURES. THIS SURVEY DOES NOT INCLUDE VIDEO PIPELINE INSPECTIONS. VERIFICATION OF LINE OF SITE HAS NOT BEEN VERIFIED. THIS SURVEYOR SUGGESTS VIDEO PIPELINE INSPECTION BY A PROFESSIONALS PROVIDING SERVICE OF THAT SPECIALTY
   3.) THIS SURVEYOR SUGGEST VIDEO PIPELINE INSPECTION BY A PROFESSIONAL PROVIDING SERVICE OF THAT SPECIALTY.

H.) TOPOGRAPHIC SURVEY:
   1.) CONTOURS ARE ON ONE FOOT INTERVALS, INTERPOLATED BETWEEN 125 FOOT GRIDS, VISIBLE GRADE BREAKS, ALONG WITH RANDOM GROUND / ELEVATIONS.
   2.) OFFSITE TOPOGRAPHIC INFORMATION SHOWN IS BASED ON THE REQUEST BY THE CLIENT AND OR THE CLIENTS AGENT, BEING AN ARCHITECT OR ENGINEER.

ABBREVIATIONS / LEGEND:

AC ACRES
A/C AIR CONDITIONER
(C) CALCULATED
CA CENTRAL ANGLE / DELTA
CB CHORD BEARING
CH CHORD DISTANCE
CMP CORRUGATED METAL PIPE
C/O CARE OF
(D) DESCRIPTION OR DEED
DWG DRAWING
EL ELEVATION
EP EDGE OF PAVEMENT
FAX FACSIMILE
FD FOUND
FDEP FLORIDA DEPARTMENT OF ENVIRONMENTAL PROTECTION
FDOT FLORIDA DEPARTMENT OF TRANSPORTATION
FEMA FEDERAL EMERGENCY MANAGEMENT AGENCY
F.I.R.M FLOOD INSURANCE RATE MAP

FL FLORIDA
ID IDENTIFICATION
INC. INCORPORATED
INV INVERT
LB LICENSED BUSINESS
LC LICENSED CORPORATION
L LENGTH
LF LINEAL FEET
LLC LIMITED LIABILITY COMPANY
LS LICENSED SURVEYOR
(M) MEASURED
N/A NOT APPLICABLE AND/OR NOT AVAILABLE
NAVD NORTH AMERICAN VERTICAL DATUM
NGVD NATIONAL GEODETIC VERTICAL DATUM
NO NUMBER
N/P NOT POSTED ON PANEL
OA OVERALL
O.R. OFFICIAL RECORD BOOK
(P) PLAT
P.A. PROFESSIONAL ASSOCIATION
PCP PERMANENT CONTROL POINT

PVC POLY VINYL CHLORIDE
PG PAGE
PGS PAGES
PK/BD PARKER KALON NAIL & BRASS DISK
P.O. POST OFFICE
PRM PERMANENT REFERENCE MONUMENT
RCP REINFORCED CONCRETE PIPE
(R) RECORD
R RADIUS
R/W RIGHT-OF-WAY
S.R. STATE ROAD
WO# WORK ORDER NUMBER
WWW.UPHAMINC.COM WORLD WIDE WEB, UPHAM INCORPORATED, COMMERCIAL

CM CONCRETE MONUMENT FOUND (AS NOTED)
IP IRON PIPE (AS NOTED)
IRC IRON ROD& CAP (AS NOTED)

PARKER KALON NAIL & DISK (AS NOTE)
CATCH BASIN / STORM INLET
GAS BACKFLOW / PRESSURE RELEASE VALVE
BACKFLOW PRVENTER
FIRE HYDRANT
CONCRETE POWER POLE
CONCRETE LIGHT POLE / BASE
GUY ANCHOR
SANITARY SEWER MANHOLE
STORM MANHOLE
UTILITY BOX

CABLE TELEVISION UTILITY BOX
WOOD POWER POLE
FIBER OPTIC CABLE BOX
CLEANOUT
SIGN
WATER VALVE
WELL
+3.5 EXISTING GROUND ELEVATION
+4.57 EXISTING HARD ELEVATION

OHE OVERHEAD ELECTRIC LINE
TOB TOP OF BANK
x 6' CHAIN FENCE
SAN SANITARY SEWER LINE
8" PVC SS SIZE AND TYPE OF SEWER LINE
18SAN SIZE OF SEWER LINE
WM WATER LINE
15RCP SIZE OF RCP STORM LINE
30CMP SIZE OF CMP STORM LINE
A/C AIR COOLANT LINES
GAS GAS LINE

CWS COLD WATER SERVICE
CWR COLD WATER RETURN
UTEL UNDERGROUND TELEPHONE LINE
UTV UNDERGROUND TELEVISION LINE
FL FIRE LINE

UPHAM INC
CIVIL ENGINEERING•SURVEYING•LANDSCAPE ARCHITECTURE
265 Kenilworth Avenue • Ormond Beach • Florida 32174
Voice: 386.672.9515 • Fax: 386.673.6554 • uphaminc.com
LB # 0003612 LC # 0000357

THIS DRAWING IS THE PROPERTY OF UPHAM, INC. ANY USE OR REPRODUCTION IN WHOLE OR PART IS PROHIBITED WITHOUT THE EXPRESSED WRITTEN CONSENT OF UPHAM INC. COPYRIGHT 2009 ALL RIGHTS RESERVED

THIS MAP IS NEITHER FULL NOR COMPLETE WITHOUT THE REPORT

THE FOREGOING PLAT IS CERTIFIED TO MEET THE MINIMUM TECHNICAL STANDARDS SET FORTH BY THE FLORIDA BOARD OF PROFESSIONAL LAND SURVEYORS AS PER CHAPTER 5J17-6, FLORIDA ADMINISTRATIVE CODE, AS PURSUANT TO SECTION 472.027, FLORIDA STATUTES.

10/12/2013
WILLIAM S HART

NOT VALID WITHOUT THE SIGNATURE AND THE ORIGINAL RAISED SEAL OF A FLORIDA LICENSED SURVEYOR AND MAPPER.

SURVEY REPORT

CERTIFIED FOR THE EXCLUSIVE USE OF:
ORMOND KING CENTER, LLC A FLORIDA LIMITED LIABILITY COMPANY
REUNION BANK OF FLORIDA
CHICAGO TITLE INSURANCE COMPANY
SMITH, HOOD, LOUCKS, STOUT, BIGMAN AND BROCK, P.A.
CITY OF ORMOND BEACH

TYPE OF SURVEY:
BOUNDARY, TOPOGRAPHIC & SPECIAL PURPOSE
MAP SUBJECT:
ORMOND KING CENTER
ADDRESS:
555 & 875 STERTHAUS AVENUE
ORMOND BEACH, FL. 32174

PROJECT No:	130906
FIELD WORK BY:	WSH
DATE:	10/29/13
OFFICE WORK BY:	AM
DATE:	10/29/13
FIELD BOOK - PAGE:	52-26
SCALE:	N/A
DRAWING FILE:	26B-144

X:\Don Work\Data\PMA\OB\RENAISSANCE\FROM SURVEYOR\13-11-07\PMA-ORMOND KING CENTER_ENG.dwg, 12/12/2013 8:53:24 AM, 1:1

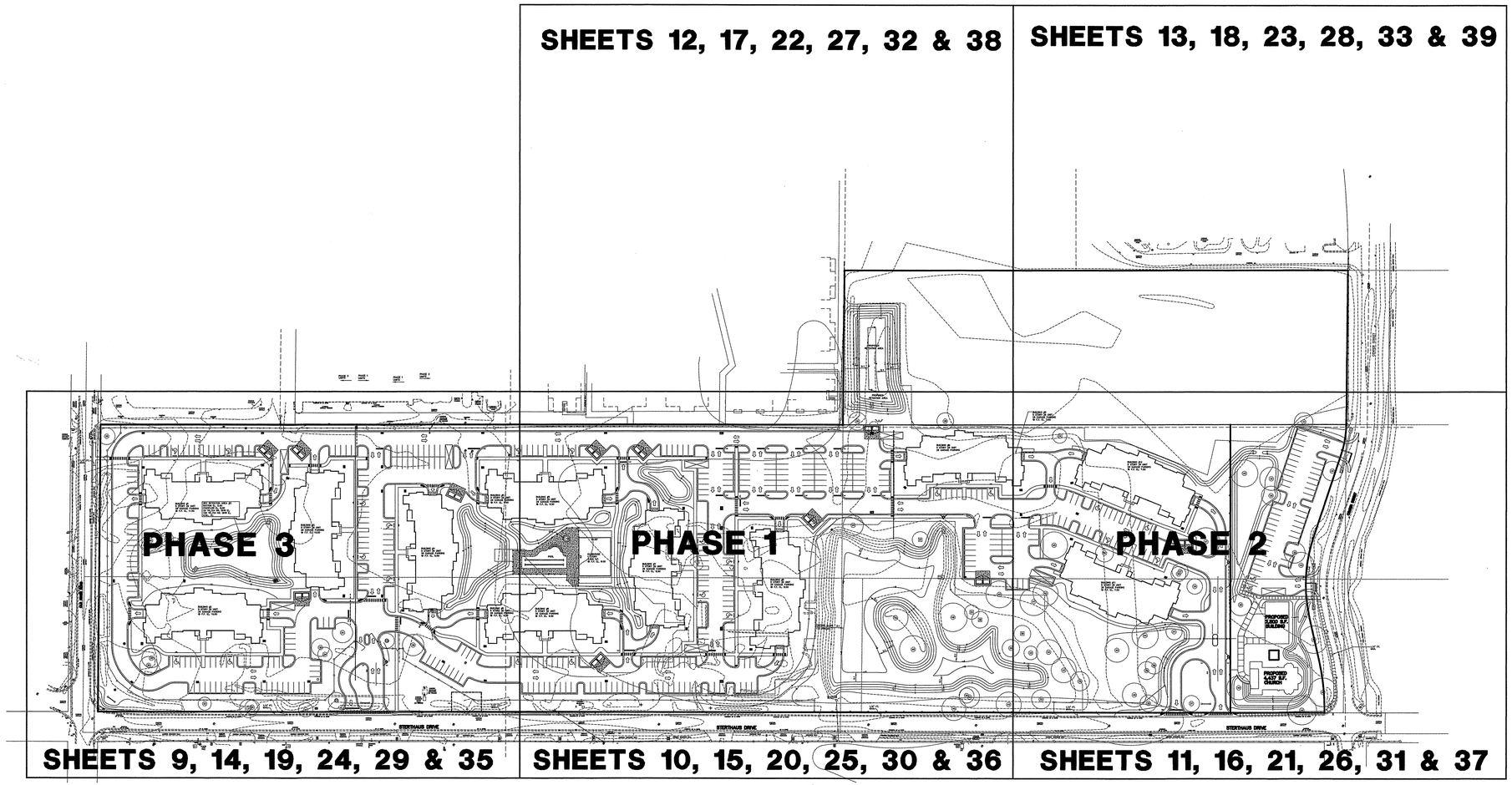

GRAPHIC SCALE

0 50 100 200 300

SCALE: 1" = 100'

NO.	DATE	DESCRIPTION	BY

REVISIONS

PARKER MYNCHENBERG & ASSOCIATES, INC.

PROFESSIONAL ENGINEERS * LANDSCAPE ARCHITECTS

1729 RIDGEWOOD AVENUE HOLLY HILL, FLORIDA 32117

(386) 677-6891 FAX (386) 677-2114 E-MAIL: info@parkermynchenberg.com

CERTIFICATION OF AUTHORIZATION NUMBER: 00003910

KEY MAP

ORMOND RENAISSANCE CONDOMINIUM

ORMOND BEACH * FLORIDA

FILE NO. 13-49SP.DWG	DESIGNER: P.MYNCHENBERG
DATE: 12.12.13	CADD TECH: C.HARNDEN
SCALE: 1"=100'	SHEET 8 OF 48

SEAL

X:\Bruce Work\Bruce Work\RENAISSANCE\13-49 SITE PLAN JAN 15 REV 6.dwg, 2/20/2014 2:57:09 PM, HP Designjet T1100 44in HPGL2.pc3, Arch D (landscape), 1:100

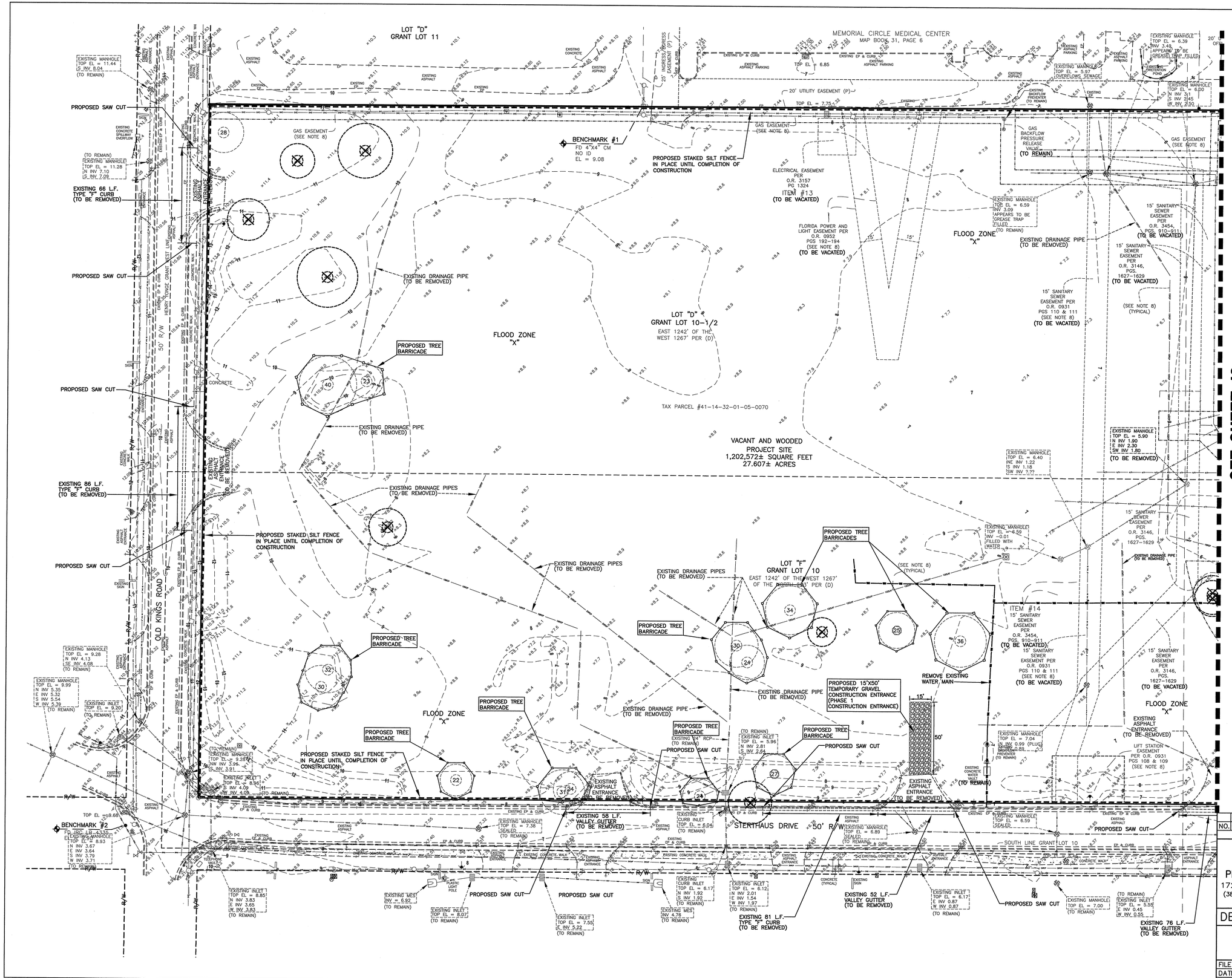

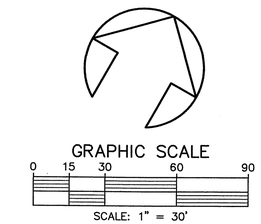

LEGEND

x8.4	EXISTING GRADE
8	EXISTING CONTOUR

TREE LEGEND / SYMBOLS / COUNT

SEE LIMITATIONS: 12(F)(1)
ONLY TREES 24" AND GREATER WERE LOCATED

- 29 — EXISTING CEDAR TREE (TO REMAIN)
- 36 — EXISTING OAK TREE (TO REMAIN)
- 28 — EXISTING PINE TREE (TO REMAIN)
- 25 — EXISTING SWEETGUM TREE (TO REMAIN)
- EXISTING TREE TO BE REMOVED
- 36 — PROPOSED TREE BARRICADES

NO.	DATE	DESCRIPTION	BY

REVISIONS

PARKER MYNCHENBERG & ASSOCIATES, INC.
PROFESSIONAL ENGINEERS * LANDSCAPE ARCHITECTS
1729 RIDGEWOOD AVENUE HOLLY HILL, FLORIDA 32117
(386) 677-6891 FAX (386) 677-2114 E-MAIL: info@parkermynchenberg.com
CERTIFICATION OF AUTHORIZATION NUMBER: 00003910

DEMOLITION AND EROSION CONTROL PLAN

ORMOND RENAISSANCE CONDOMINIUM
ORMOND BEACH * FLORIDA

FILE NO. 13-49SP.DWG	DESIGNER: P.MYNCHENBERG
DATE: 12.12.13	CADD TECH: C.HARNDEN
SCALE: 1"=30'	SHEET 9 OF 48

SEAL

X:\Bruce Work\Bruce Work\RENAISSANCE\13-49 SITE PLAN JAN 15 REV 6.dwg, 2/20/2014 2:40:23 PM, HP Designjet T1100 44in HPGL2.pc3, Arch D (landscape), 1:30

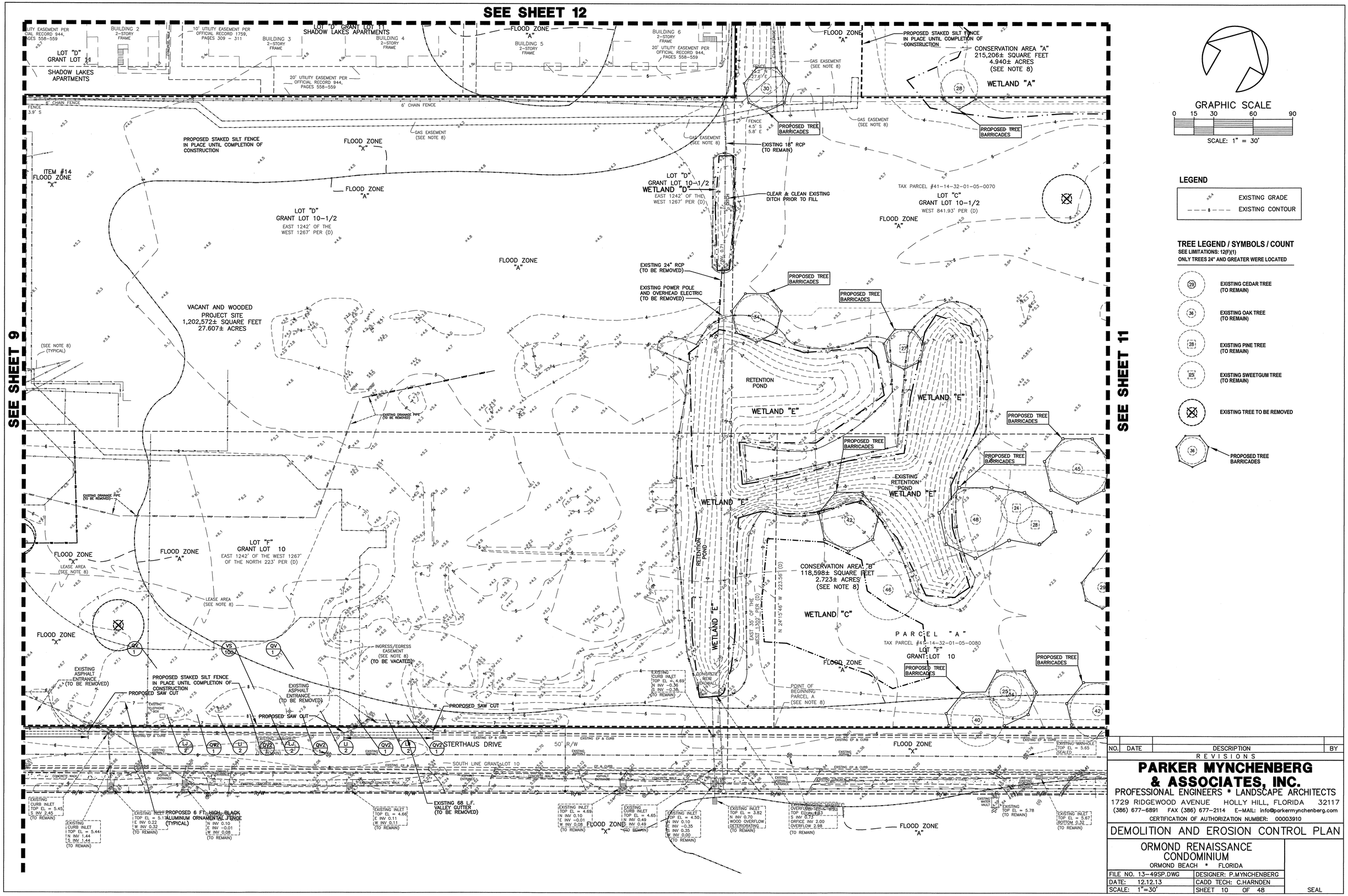

NO.	DATE	DESCRIPTION	BY
		REVISIONS	

PARKER MYNCHENBERG & ASSOCIATES, INC.

PROFESSIONAL ENGINEERS * LANDSCAPE ARCHITECTS

1729 RIDGEWOOD AVENUE HOLLY HILL, FLORIDA 32117

(386) 677-6891 FAX (386) 677-2114 E-MAIL: info@parkermynchenberg.com

CERTIFICATION OF AUTHORIZATION NUMBER: 00003910

DEMOLITION AND EROSION CONTROL PLAN

ORMOND RENAISSANCE CONDOMINIUM

ORMOND BEACH * FLORIDA

FILE NO. 13-49SP.DWG	DESIGNER: P.MYNCHENBERG
DATE: 12.12.13	CADD TECH: C.HARNDEN
SCALE: 1"=30'	SHEET 10 OF 48

SEAL

X:\Bruce Work\Bruce Work\REALNISSANCE\13-49 SITE PLAN JAN 15 REV 6.dwg 2/20/2014 2:46:01 PM, HP Designjet T1100 44in HPGL2 pc5, Arch D (Landscape), 1:30

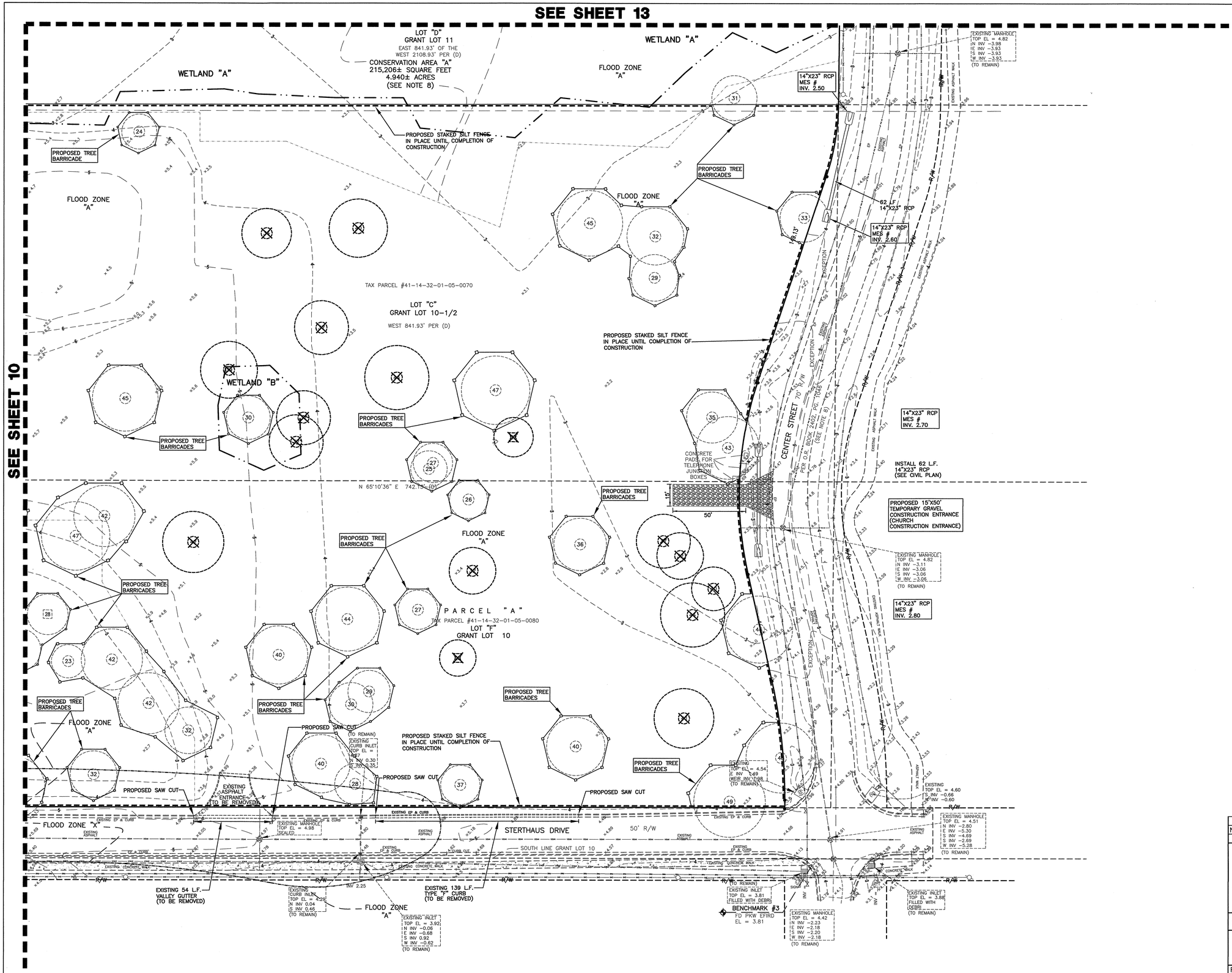

GRAPHIC SCALE

0 15 30 60 90

SCALE: 1" = 30'

LEGEND

x5.4	EXISTING GRADE
8	EXISTING CONTOUR

TREE LEGEND / SYMBOLS / COUNT

SEE LIMITATIONS: 12(F)(1)
ONLY TREES 24" AND GREATER WERE LOCATED

29	EXISTING CEDAR TREE (TO REMAIN)
36	EXISTING OAK TREE (TO REMAIN)
28	EXISTING PINE TREE (TO REMAIN)
25	EXISTING SWEETGUM TREE (TO REMAIN)
	EXISTING TREE TO BE REMOVED
36	PROPOSED TREE BARRICADES

NO.	DATE	DESCRIPTION	BY
		REVISIONS	

PARKER MYNCHENBERG & ASSOCIATES, INC.
PROFESSIONAL ENGINEERS * LANDSCAPE ARCHITECTS
1729 RIDGEWOOD AVENUE HOLLY HILL, FLORIDA 32117
(386) 677-6891 FAX (386) 677-2114 E-MAIL: info@parkermynchenberg.com
CERTIFICATION OF AUTHORIZATION NUMBER: 00003910

DEMOLITION AND EROSION CONTROL PLAN

ORMOND RENAISSANCE CONDOMINIUM
ORMOND BEACH * FLORIDA

FILE NO. 13-49SP.DWG	DESIGNER: P.MYNCHENBERG
DATE: 12.12.13	CADD TECH: C.HARNDEN
SCALE: 1"=30'	SHEET 11 OF 48

SEAL

X:\Bruce Work\Bruce Work\BEN\ASSIGNED\13-49 SITE PLAN JAN 15 REV 4.dwg, 2/20/2014 2:41:28 PM, HP Designjet T1100 44in HPGL2.pc3, Arch D (landscape), 1:30

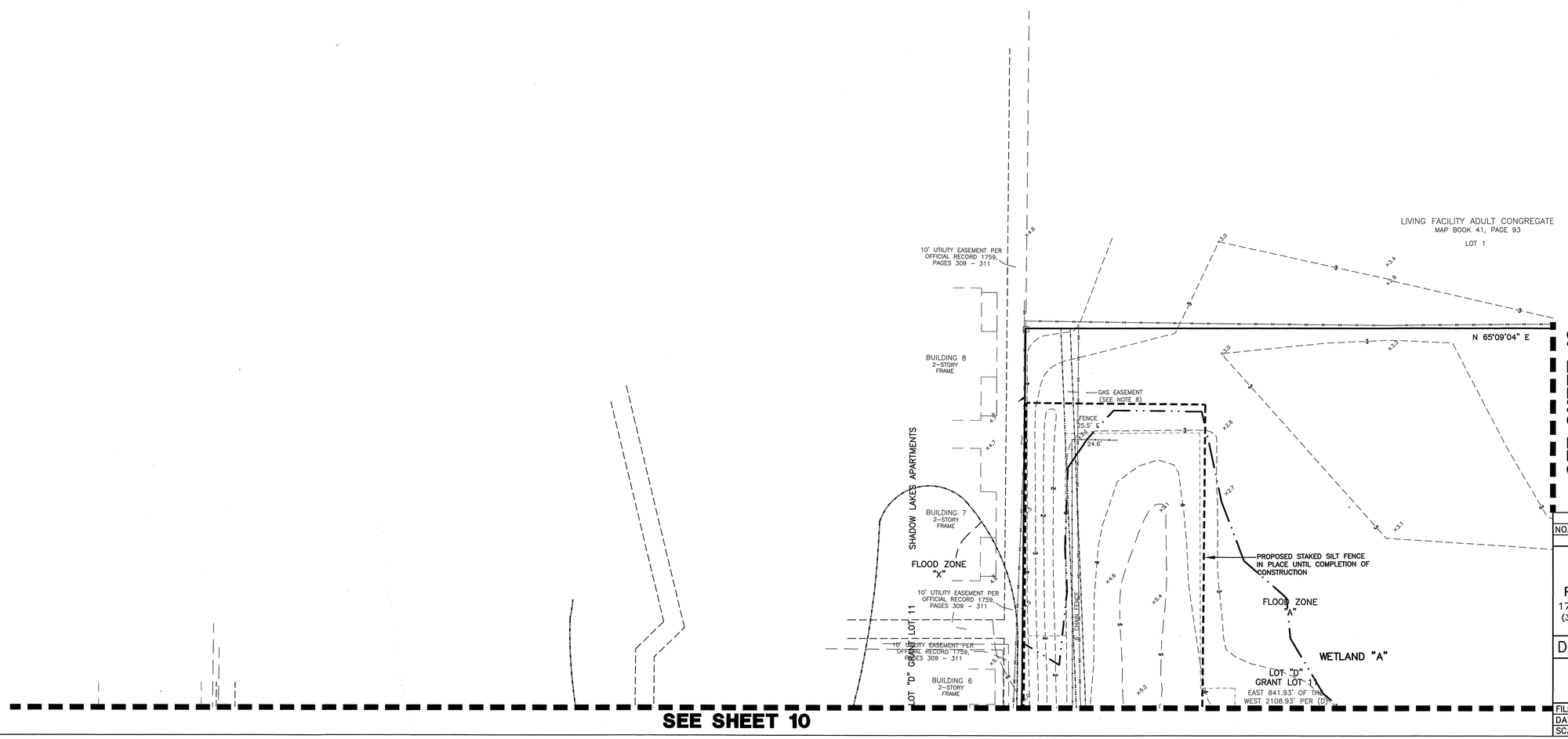

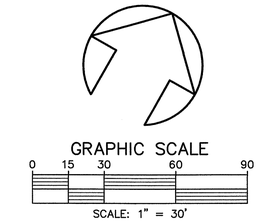

LEGEND

x8.4	EXISTING GRADE
— — 8 — —	EXISTING CONTOUR

TREE LEGEND / SYMBOLS / COUNT

SEE LIMITATIONS: 12(F)(1)
ONLY TREES 24" AND GREATER WERE LOCATED

29	EXISTING CEDAR TREE (TO REMAIN)
36	EXISTING OAK TREE (TO REMAIN)
28	EXISTING PINE TREE (TO REMAIN)
25	EXISTING SWEETGUM TREE (TO REMAIN)
	EXISTING TREE TO BE REMOVED
36	PROPOSED TREE BARRICADES

NO.	DATE	DESCRIPTION	BY

REVISIONS

PARKER MYNCHENBERG & ASSOCIATES, INC.
PROFESSIONAL ENGINEERS * LANDSCAPE ARCHITECTS
1729 RIDGEWOOD AVENUE HOLLY HILL, FLORIDA 32117
(386) 677-6891 FAX (386) 677-2114 E-MAIL: info@parkermynchenberg.com
CERTIFICATION OF AUTHORIZATION NUMBER: 00003910

DEMOLITION AND EROSION CONTROL PLAN

ORMOND RENAISSANCE CONDOMINIUM
ORMOND BEACH * FLORIDA

FILE NO. 13-49SP.DWG	DESIGNER: P.MYNCHENBERG
DATE: 12.12.13	CADD TECH: C.HARNDEN
SCALE: 1"=30'	SHEET 12 OF 48

SEAL

X:\Bruce Work\Bruce Work\RENAISSANCE\13-49 SITE PLAN JAN 15 REV 6.dwg, 2/20/2014 2:42:05 PM, HP Designjet T1100 44in HPGL2.pc3, Arch D (landscape), 1:30

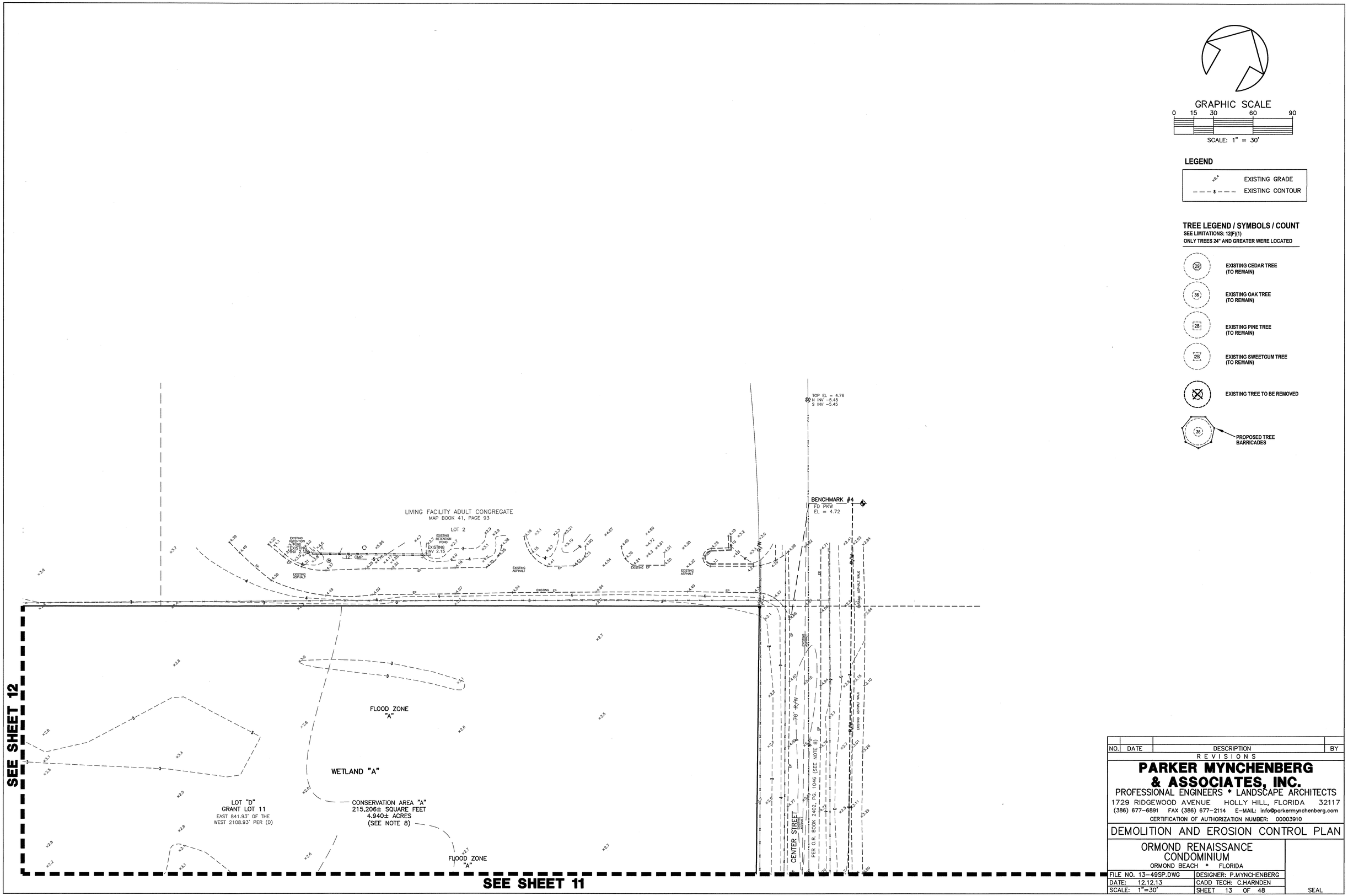

NO.	DATE	DESCRIPTION	BY

REVISIONS

PARKER MYNCHENBERG & ASSOCIATES, INC.

PROFESSIONAL ENGINEERS * LANDSCAPE ARCHITECTS

1729 RIDGEWOOD AVENUE HOLLY HILL, FLORIDA 32117

(386) 677-6891 FAX (386) 677-2114 E-MAIL: info@parkermynchenberg.com

CERTIFICATION OF AUTHORIZATION NUMBER: 00003910

DEMOLITION AND EROSION CONTROL PLAN

ORMOND RENAISSANCE CONDOMINIUM

ORMOND BEACH * FLORIDA

FILE NO. 13-49SP.DWG	DESIGNER: P.MYNCHENBERG
DATE: 12.12.13	CADD TECH: C.HARNDEN
SCALE: 1"=30'	SHEET 13 OF 48

SEAL

X:\Bruce Work\Bruce Work\RENAISSANCE\13-49 SITE PLAN JAN 15 REV 6.dwg, 2/20/2014 2:42:27 PM, HP Designjet T1100 44in HPGL2.pc3, Arch D (Landscape), 1:30

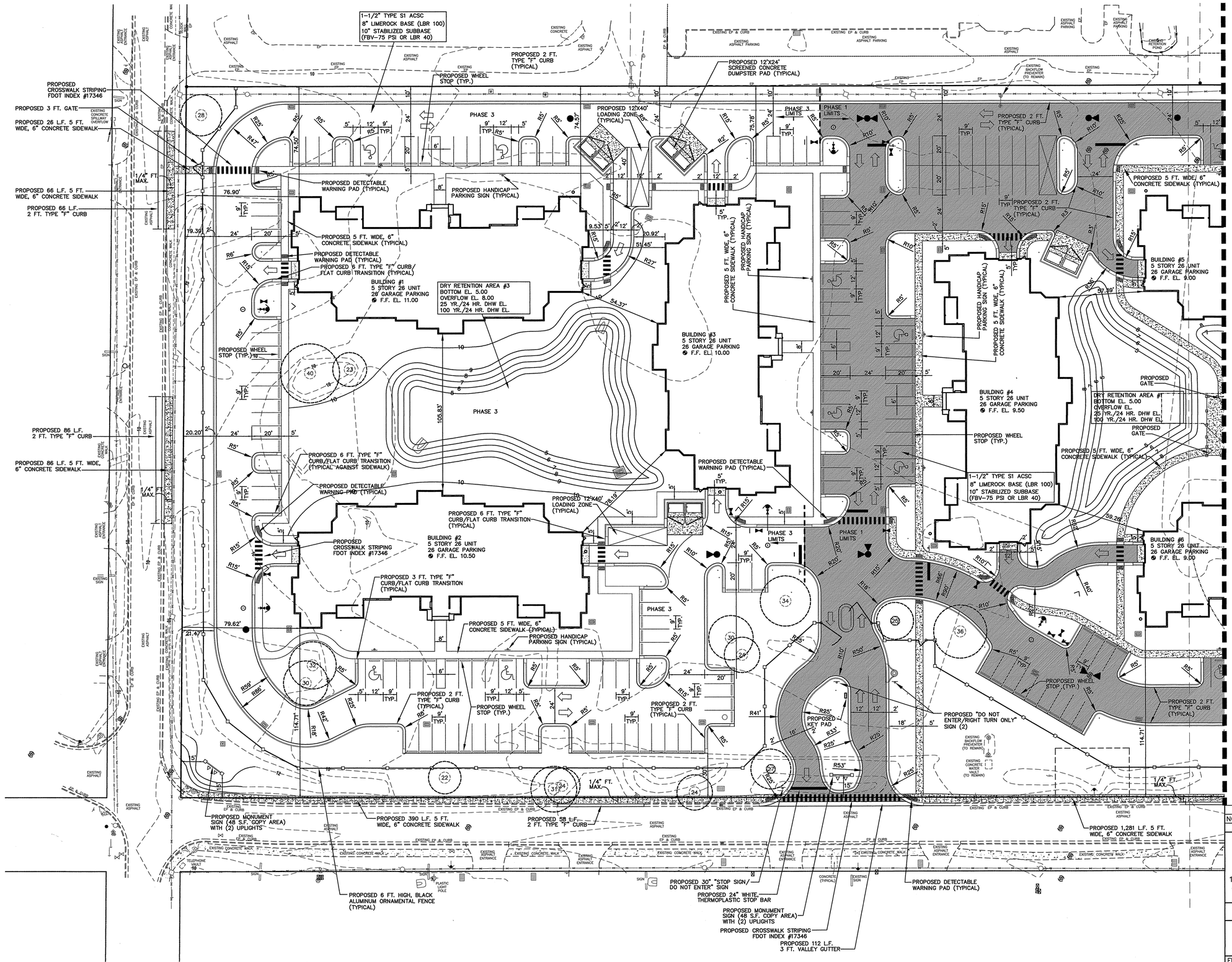

GRAPHIC SCALE

0 15 30 60 90

SCALE: 1" = 30'

SEE SHEET 15

NO.	DATE	DESCRIPTION	BY

REVISIONS

PARKER MYNCHENBERG & ASSOCIATES, INC.

PROFESSIONAL ENGINEERS * LANDSCAPE ARCHITECTS

1729 RIDGEWOOD AVENUE HOLLY HILL, FLORIDA 32117

(386) 677-6891 FAX (386) 677-2114 E-MAIL: info@parkermynchenberg.com

CERTIFICATION OF AUTHORIZATION NUMBER: 00003910

SITE PLAN

ORMOND RENAISSANCE CONDOMINIUM

ORMOND BEACH * FLORIDA

FILE NO. 13-49SP.DWG	DESIGNER: P.MYNCHENBERG
DATE: 12.12.13	CADD TECH: C.HARNDEN
SCALE: 1"=30'	SHEET 14 OF 48

SEAL

X:\Bruce Work\Bruce Work\RENAISSANCE\13-49 SITE PLAN\JAN 15 REV 6.dwg, 2/27/2014 1:11:29 PM, HP Designjet T1100 44in HPGL2.pc3, Arch D (landscape), 1:30

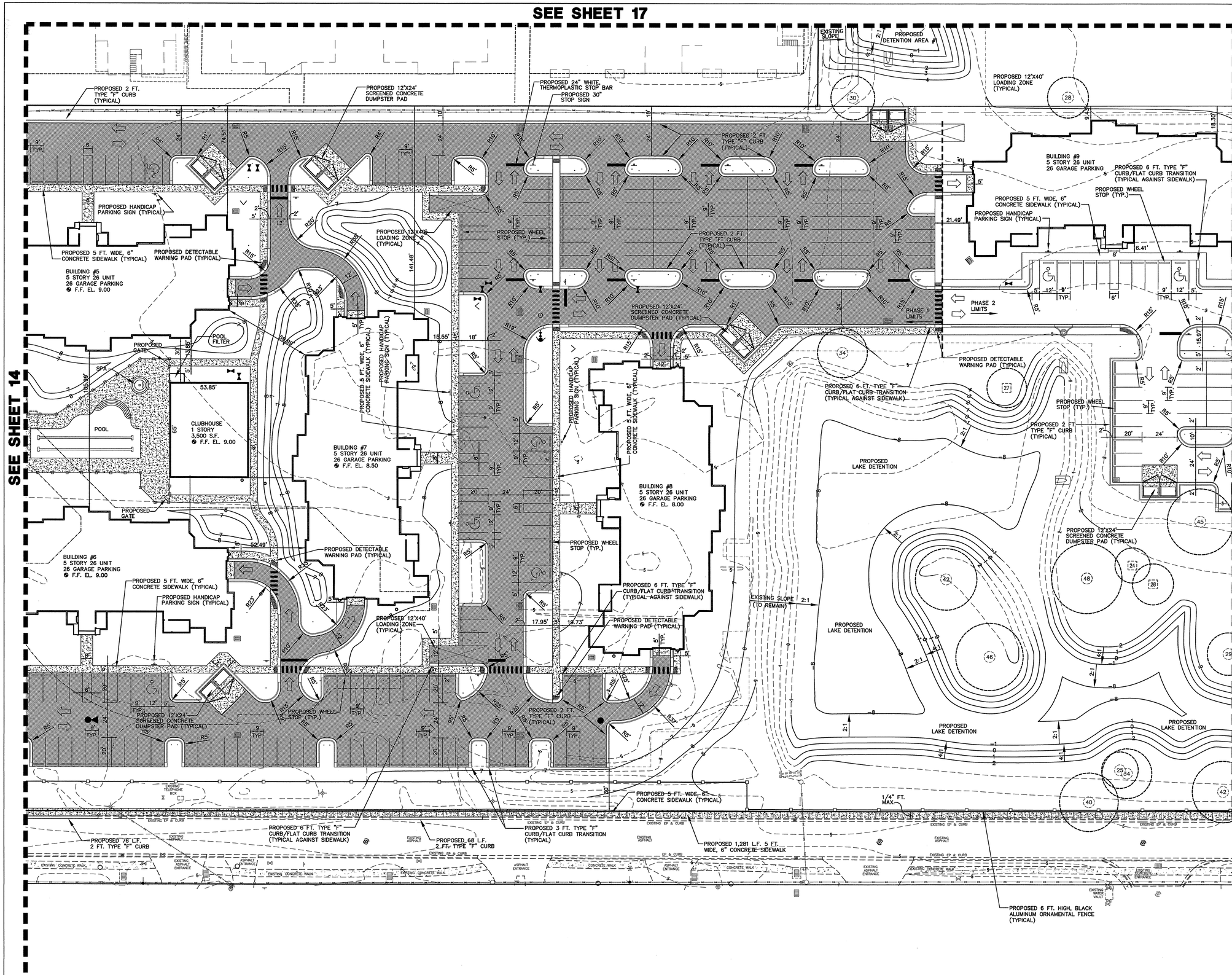

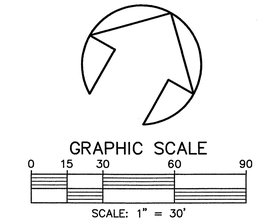

NO.	DATE	DESCRIPTION	BY

REVISIONS

PARKER MYNCHENBERG & ASSOCIATES, INC.

PROFESSIONAL ENGINEERS * LANDSCAPE ARCHITECTS

1729 RIDGEWOOD AVENUE HOLLY HILL, FLORIDA 32117

(386) 677-6891 FAX (386) 677-2114 E-MAIL: info@parkermynchenberg.com

CERTIFICATION OF AUTHORIZATION NUMBER: 00003910

SITE PLAN

ORMOND RENAISSANCE CONDOMINIUM

ORMOND BEACH * FLORIDA

FILE NO. 13-49SP.DWG	DESIGNER: P.MYNCHENBERG
DATE: 12.12.13	CADD TECH: C.HARNDEN
SCALE: 1"=30'	SHEET 15 OF 48

SEAL

X:\Bruce Work\Bruce Work\RENAISSANCE\13-49 SITE PLAN JAN 15 REV 6.dwg, 2/27/2014 1:13:18 PM, HP Designjet T1100 44in HPGL2.pc3, Arch D (landscape), 1:30

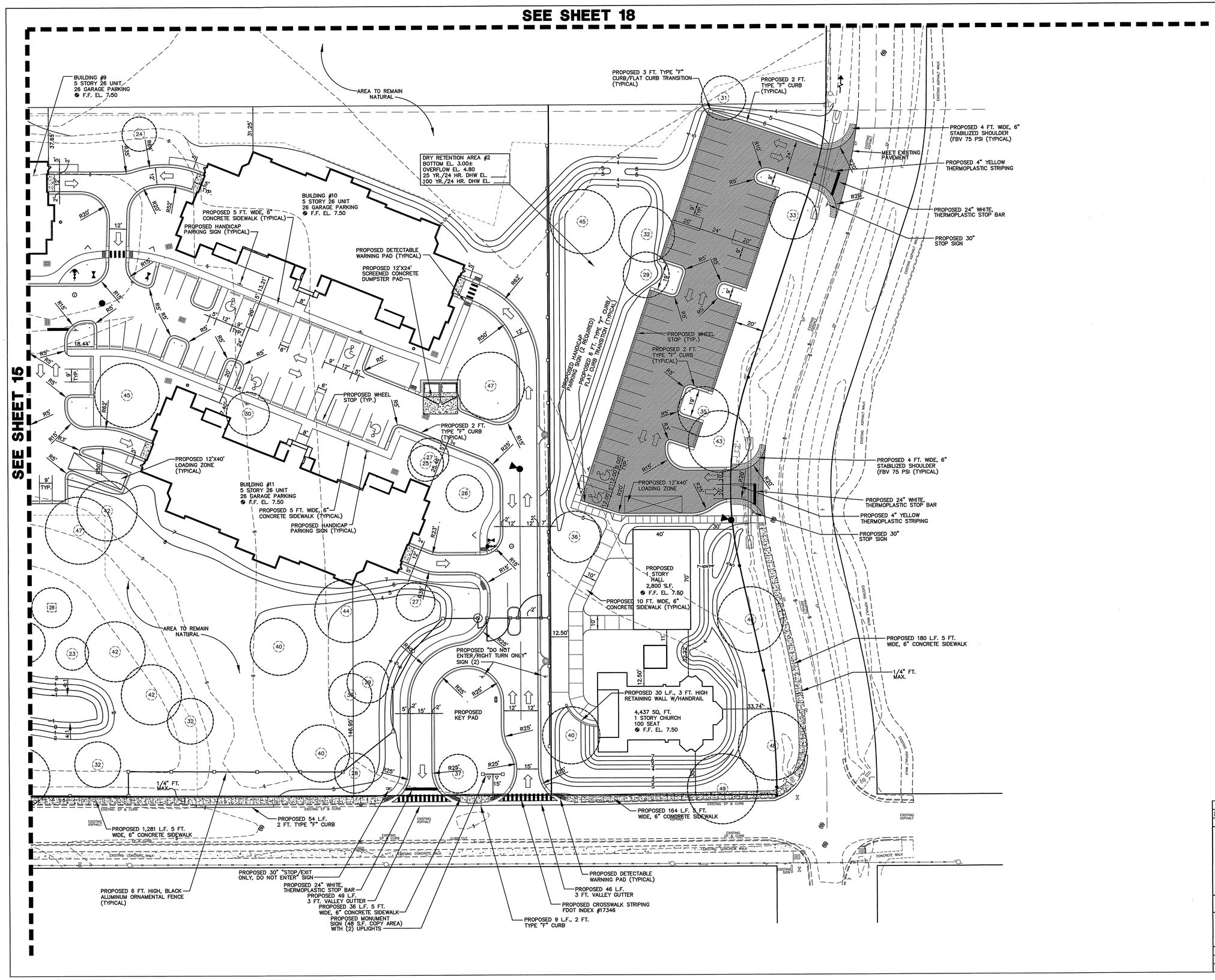

GRAPHIC SCALE

0 15 30 60 90

SCALE: 1" = 30'

NO.	DATE	DESCRIPTION	BY

REVISIONS

PARKER MYNCHENBERG & ASSOCIATES, INC.

PROFESSIONAL ENGINEERS * LANDSCAPE ARCHITECTS

1729 RIDGEWOOD AVENUE HOLLY HILL, FLORIDA 32117

(386) 677-6891 FAX (386) 677-2114 E-MAIL: info@parkermynchenberg.com

CERTIFICATION OF AUTHORIZATION NUMBER: 00003910

SITE PLAN

ORMOND RENAISSANCE CONDOMINIUM

ORMOND BEACH * FLORIDA

FILE NO. 13-49SP.DWG	DESIGNER: P.MYNCHENBERG
DATE: 12.12.13	CADD TECH: C.HARNDEN
SCALE: 1"=30'	SHEET 16 OF 48

SEAL

X:\Bruce Work\Bruce Work\RENAISSANCE\13-49 SITE PLAN JAN 15 REV 6.dwg, 2/27/2014 11:8:54 PM, HP Designjet T1100 44in HPGL2.pc3, Arch D (landscape), 1:30

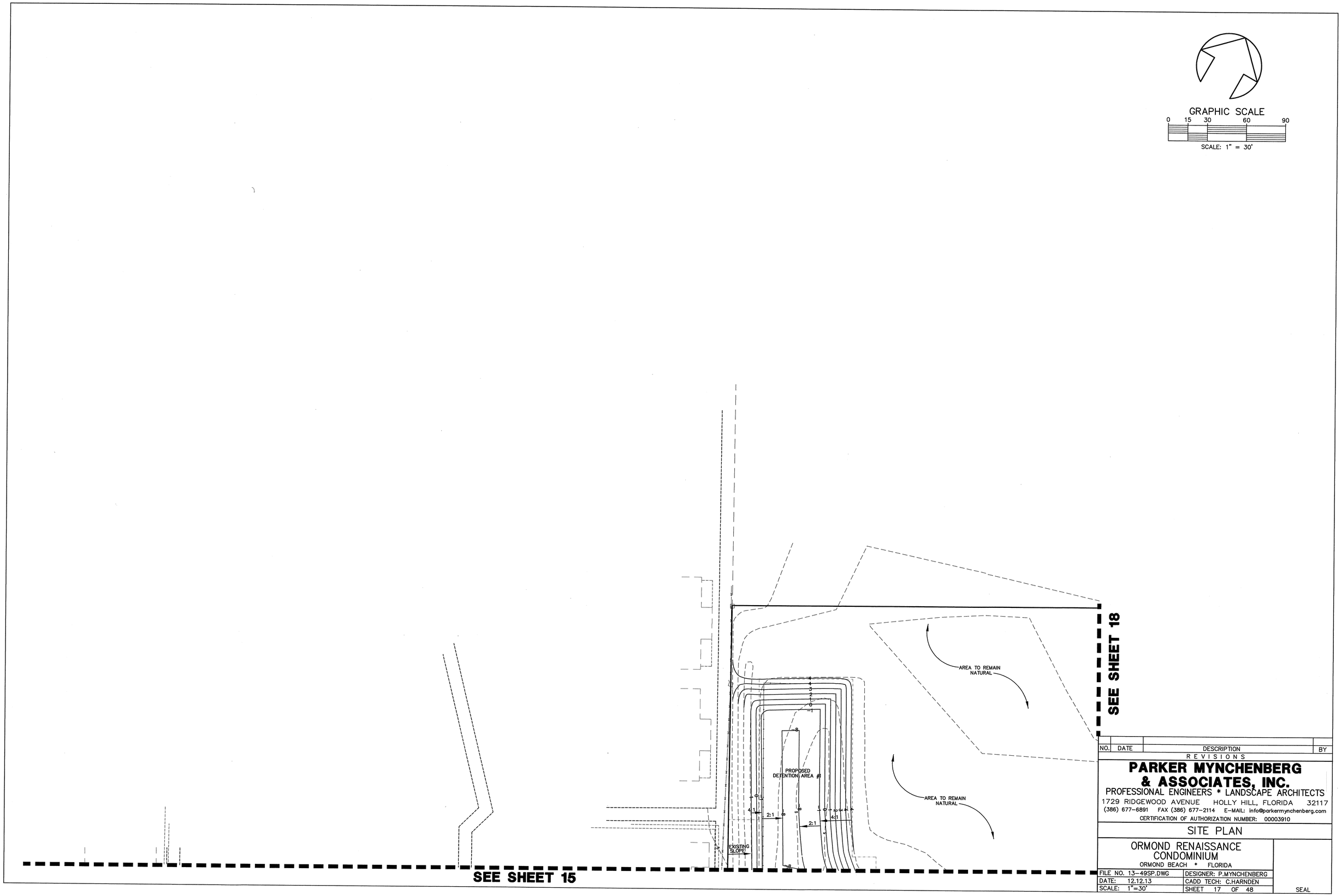

NO.	DATE	DESCRIPTION	BY

REVISIONS

PARKER MYNCHENBERG & ASSOCIATES, INC.

PROFESSIONAL ENGINEERS * LANDSCAPE ARCHITECTS

1729 RIDGEWOOD AVENUE HOLLY HILL, FLORIDA 32117

(386) 677-6891 FAX (386) 677-2114 E-MAIL: info@parkermynchenberg.com

CERTIFICATION OF AUTHORIZATION NUMBER: 00003910

SITE PLAN

ORMOND RENAISSANCE CONDOMINIUM

ORMOND BEACH * FLORIDA

FILE NO. 13-49SP.DWG	DESIGNER: P.MYNCHENBERG
DATE: 12.12.13	CADD TECH: C.HARNDEN
SCALE: 1"=30'	SHEET 17 OF 48

SEAL

X:\Bruce Work\Bruce Work\RENAISSANCE\13-49 SITE PLAN JAN 15 REV 6.dwg, 2/27/2014 11:41:18 PM, HP Designjet T1100 44in HPGL2.pc3, Arch D (Landscape), 1:30

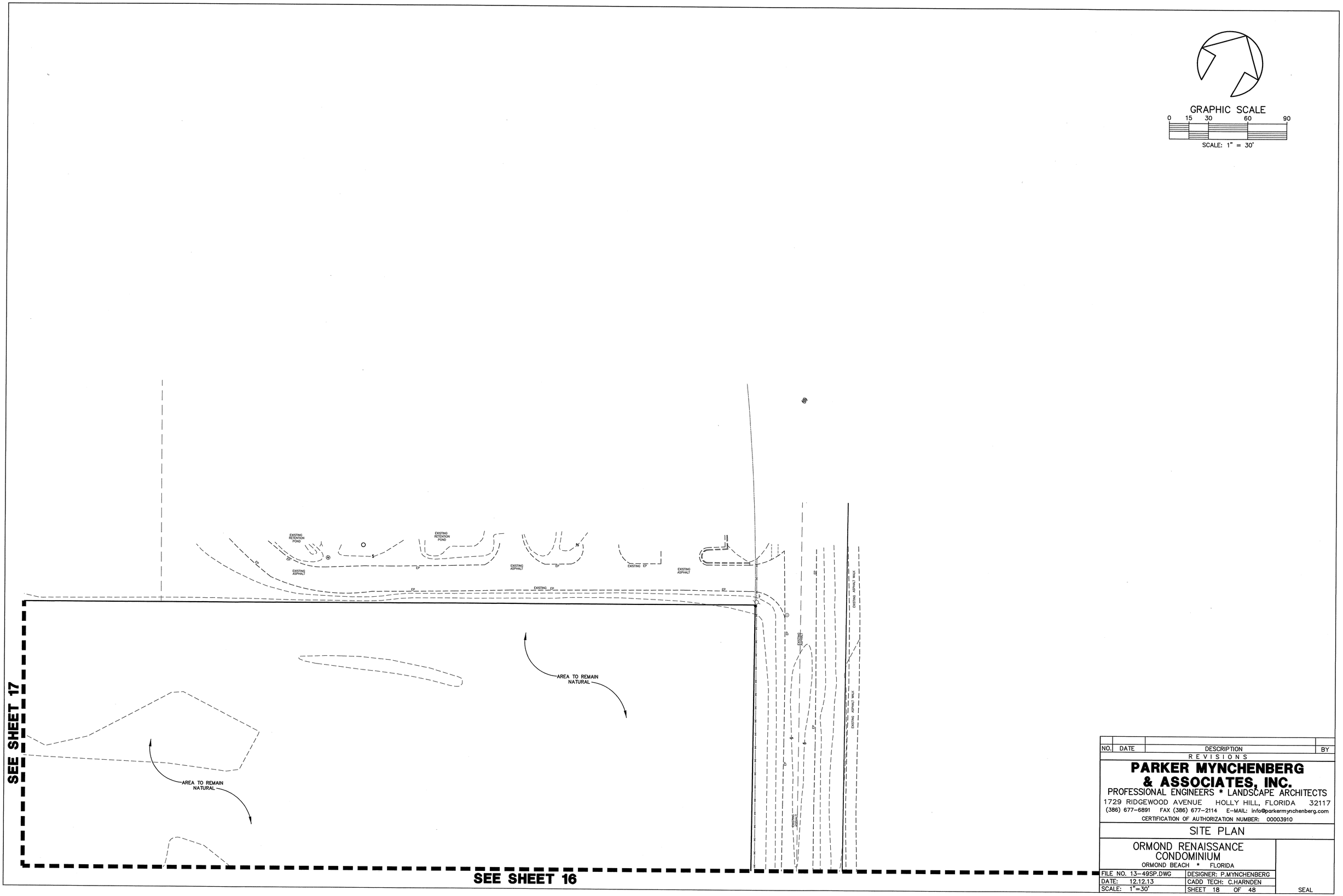

NO.	DATE	DESCRIPTION	BY

REVISIONS

PARKER MYNCHENBERG & ASSOCIATES, INC.

PROFESSIONAL ENGINEERS * LANDSCAPE ARCHITECTS

1729 RIDGEWOOD AVENUE HOLLY HILL, FLORIDA 32117

(386) 677-6891 FAX (386) 677-2114 E-MAIL: info@parkermynchenberg.com

CERTIFICATION OF AUTHORIZATION NUMBER: 00003910

SITE PLAN

ORMOND RENAISSANCE CONDOMINIUM

ORMOND BEACH * FLORIDA

FILE NO. 13-49SP.DWG	DESIGNER: P.MYNCHENBERG
DATE: 12.12.13	CADD TECH: C.HARNDEN
SCALE: 1"=30'	SHEET 18 OF 48

SEAL

X:\Bruce Work\Bruce Work\BENAISSANCE\13-49 SITE PLAN JAN 15 REV 6.dwg, 2/27/2014 1:14:33 PM, HP Designjet T1100 44in HPGL2.pc3, Arch D (landscape), 1:30

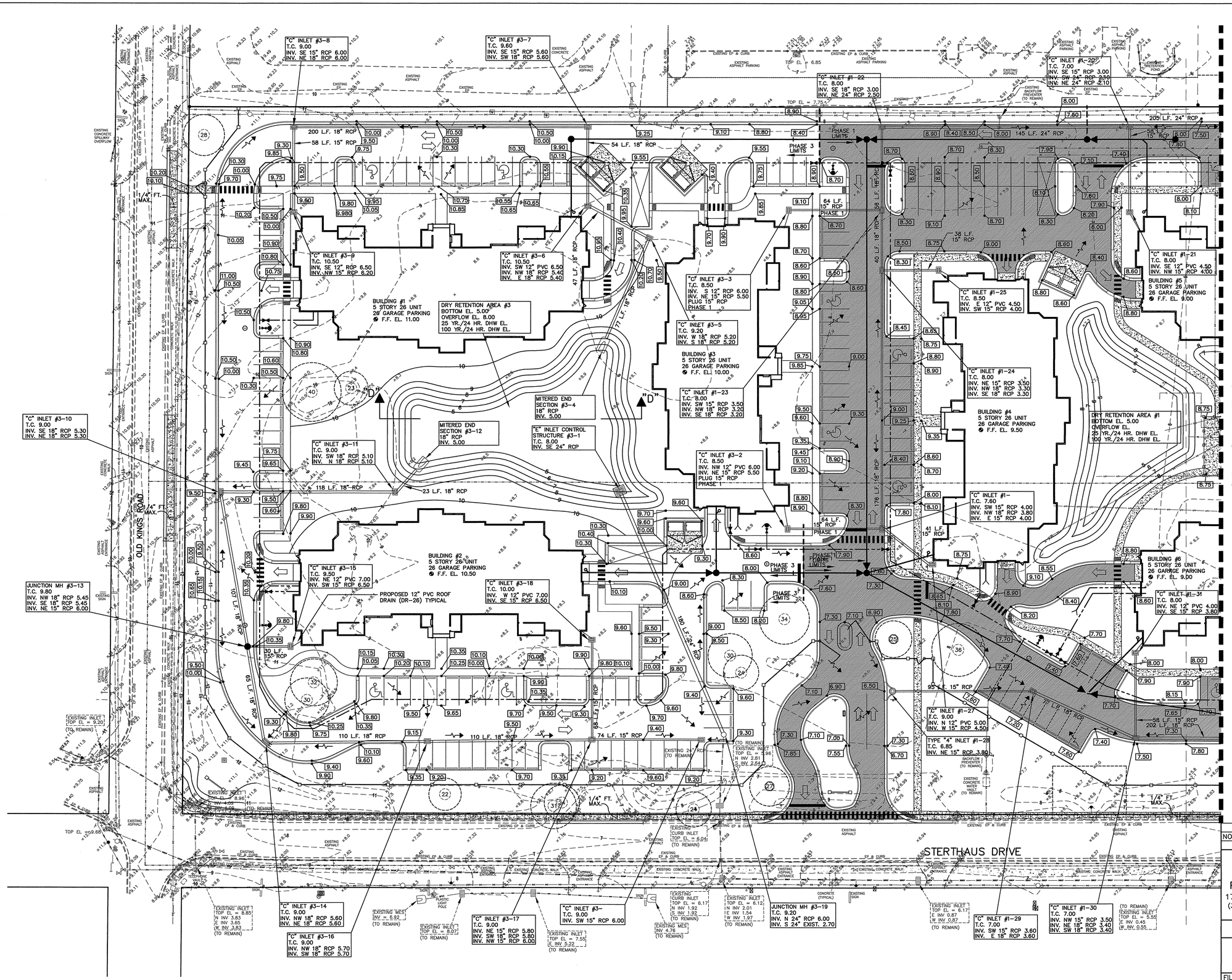

SEE SHEET 20

GRAPHIC SCALE

0 15 30 60 90

SCALE: 1" = 30'

LEGEND

- EXISTING GRADE
- EXISTING CONTOUR
- PROPOSED GRADE
- PROPOSED CONTOUR
- PROPOSED DRAINAGE FLOW PATTERN
- 1-1/2" TYPE S1 ACSC 8" LIMEROCK BASE (LBR 100) 10" STABILIZED SUBBASE (FBV-75 PSI OR LBR 40)

NO.	DATE	DESCRIPTION	BY

REVISIONS

PARKER MYNCHENBERG & ASSOCIATES, INC.

PROFESSIONAL ENGINEERS * LANDSCAPE ARCHITECTS

1729 RIDGEWOOD AVENUE HOLLY HILL, FLORIDA 32117

(386) 677-6891 FAX (386) 677-2114 E-MAIL: info@parkermynchenberg.com

CERTIFICATION OF AUTHORIZATION NUMBER: 00003910

CIVIL SITE PLAN

ORMOND RENAISSANCE CONDOMINIUM

ORMOND BEACH * FLORIDA

FILE NO. 13-49SP.DWG	DESIGNER: P.MYNCHENBERG
DATE: 12.12.13	CADD TECH: C.HARNDEN
SCALE: 1"=30'	SHEET 19 OF 48

SEAL

X:\Bruce Work\Bruce Work\RENAISSANCE\13-49 SITE PLAN JAN 15 REV 6.dwg, 2/27/2014 1:15:27 PM, HP Designjet T1100 44in HPGL2.pc3, Arch D (landscape), 1:30

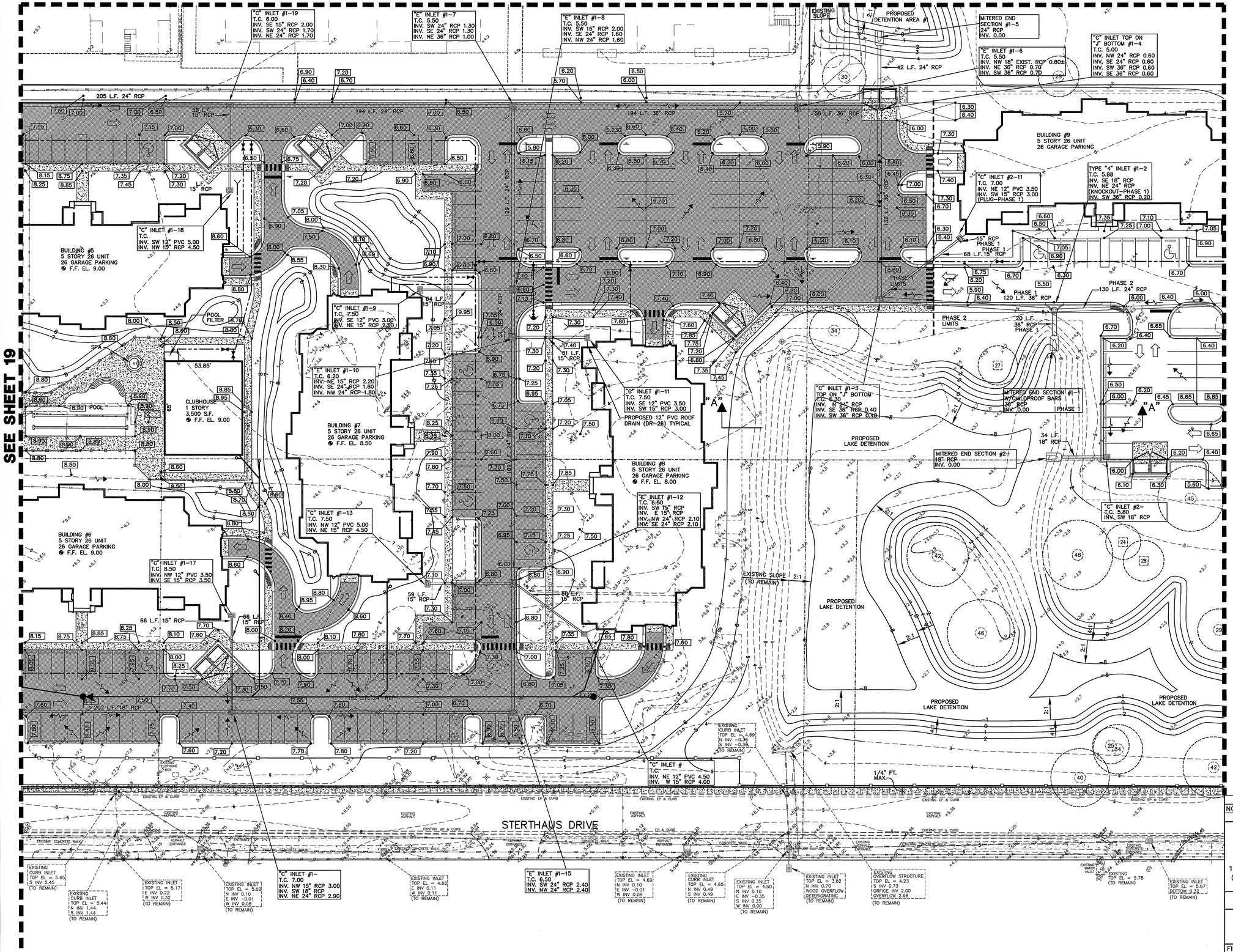

GRAPHIC SCALE

0 15 30 60 90

SCALE: 1" = 30'

LEGEND

4.5	EXISTING GRADE
4	EXISTING CONTOUR
8.10	PROPOSED GRADE
9	PROPOSED CONTOUR
	PROPOSED DRAINAGE FLOW PATTERN
	1-1/2" TYPE S1 ACSC 8" LIMEROCK BASE (LBR 100) 10" STABILIZED SUBBASE (FBV-75 PSI OR LBR 40)

NO.	DATE	DESCRIPTION	BY
		REVISIONS	

PARKER MYNCHENBERG & ASSOCIATES, INC.

PROFESSIONAL ENGINEERS * LANDSCAPE ARCHITECTS

1729 RIDGEWOOD AVENUE HOLLY HILL, FLORIDA 32117

(386) 677-6891 FAX (386) 677-2114 E-MAIL: info@parkermynchenberg.com

CERTIFICATION OF AUTHORIZATION NUMBER: 00003910

CIVIL SITE PLAN

ORMOND RENAISSANCE CONDOMINIUM

ORMOND BEACH * FLORIDA

FILE NO. 13-49SP.DWG	DESIGNER: P.MYNCHENBERG	
DATE: 12.12.13	CADD TECH: C.HARNDEN	
SCALE: 1"=30'	SHEET 20 OF 48	SEAL

X:\Bruce Work\Bruce Work\RENAISSANCE\13-49 SITE PLAN JAN 15 REV 6.dwg, 2/27/2014 11:51:50 PM, HP Designjet T1100 44in HPGL2.pc3, Arch D (landscape), 1:30

SEE SHEET 23

SEE SHEET 20

"C" INLET #2-10
T.C. 3.00
INV. NW 12" PVC 3.00
INV. SE 15" RCP 2.50

BUILDING #9
5 STORY 26 UNIT
26 GARAGE PARKING
F.F. EL. 7.50

"C" INLET #2-9
T.C. 5.80
INV. NW 15" RCP
INV. SW 24" RCP 0.90
INV. NE 24" RCP 0.90

DRY RETENTION AREA #2
BOTTOM EL. 3.00±
OVERFLOW EL. 4.80
25 YR./24 HR. DHW EL.
100 YR./24 HR. DHW EL.

PROPOSED 10 FT. WIDE
SODDED OVERFLOW EL. 4.80

BUILDING #10
5 STORY 26 UNIT
26 GARAGE PARKING
F.F. EL. 7.50

"C" INLET #2-8
T.C. 7.00
INV. NE 12" PVC 3.00
INV. SE 15" RCP 2.50

"C" INLET #2-6
T.C. 5.80
INV. NW 15" RCP 2.00
INV. S 15" RCP 2.00
INV. E 18" RCP 1.10
INV. SW 24" RCP 1.10

"C" INLET #2-5
T.C. 7.00
INV. N 12" PVC 3.00
INV. S 15" RCP 2.50

"C" INLET #2-3
T.C. 5.80
INV. N 12" PVC 2.00
INV. S 15" RCP 2.00
INV. E 18" RCP 1.50
INV. W 18" RCP 1.50

TYPE "4" INLET #2-2
T.C. 5.85
INV. SE 15" RCP 1.70
INV. W 18" RCP 1.70

"C" INLET #2-7
T.C. 7.00
INV. S 12" PVC 3.00
INV. N 15" RCP 2.50

BUILDING #11
5 STORY 26 UNIT
26 GARAGE PARKING
F.F. EL. 7.50

"C" INLET #2-4
T.C. 7.00
INV. SE 12" PVC 3.00
INV. N 15" RCP 2.50

PROPOSED 12" PVC ROOF
DRAIN (DR-26) TYPICAL

TYPE "4" INLET #2-1
T.C. 5.85
INV. NW 15" RCP 2.00

PROPOSED
1 STORY
HALL
2,800 S.F.
F.F. EL. 7.50

4,437 SQ. FT.
1 STORY CHURCH
100 SEAT
F.F. EL. 7.50

14"X23" RCP
MES #C-4
INV. 2.50

62 L.F.
14"X23" RCP

14"X23" RCP
MES #C-3
INV. 2.60

14"X23" RCP
MES #C-2
INV. 2.70

INSTALL 62 L.F.
14"X23" RCP
(SEE CIVIL PLAN)

14"X23" RCP
MES #C-1
INV. 2.80

CENTER STREET

STERTHAUS DRIVE

EXISTING CURB INLET
TOP EL = 4.29
N INV 0.04
S INV 0.46
(TO REMAIN)

EXISTING INLET
TOP EL = 3.92
N INV -0.06
E INV -0.68
S INV 0.92
W INV -0.62
(TO REMAIN)

(TO REMAIN)
EXISTING INLET
TOP EL = 3.81
FILLED WITH DEBRI

EXISTING INLET
TOP EL = 3.88
FILLED WITH
DEBRI
(TO REMAIN)

EXISTING
TOP EL = 4.60
S INV -0.66
W INV -0.60

1/4" FT.
MAX.

GRAPHIC SCALE

0 15 30 60 90

SCALE: 1" = 30'

LEGEND

x4.5	EXISTING GRADE
4	EXISTING CONTOUR
8.10	PROPOSED GRADE
9	PROPOSED CONTOUR
	PROPOSED DRAINAGE FLOW PATTERN
	1-1/2" TYPE S1 ACSC 8" LIMEROCK BASE (LBR 100) 10" STABILIZED SUBBASE (FBV-75 PSI OR LBR 40)

NO.	DATE	DESCRIPTION	BY

REVISIONS

PARKER MYNCHENBERG & ASSOCIATES, INC.
PROFESSIONAL ENGINEERS * LANDSCAPE ARCHITECTS
1729 RIDGEWOOD AVENUE HOLLY HILL, FLORIDA 32117
(386) 677-6891 FAX (386) 677-2114 E-MAIL: info@parkermynchenberg.com
CERTIFICATION OF AUTHORIZATION NUMBER: 00003910

CIVIL SITE PLAN

ORMOND RENAISSANCE CONDOMINIUM
ORMOND BEACH * FLORIDA

FILE NO. 13-49SP.DWG	DESIGNER: P.MYNCHENBERG
DATE: 12.12.13	CADD TECH: C.HARNDEN
SCALE: 1"=30'	SHEET 21 OF 48

SEAL

X:\Bruce Work\Bruce Work\RENAISSANCE\13-49 SITE PLAN JAN 15 REV 4.dwg, 2/27/2014 11:16:07 PM, HP Designjet T1120 44in HPGL2.pc3, Arch D (Landscape), 1:30

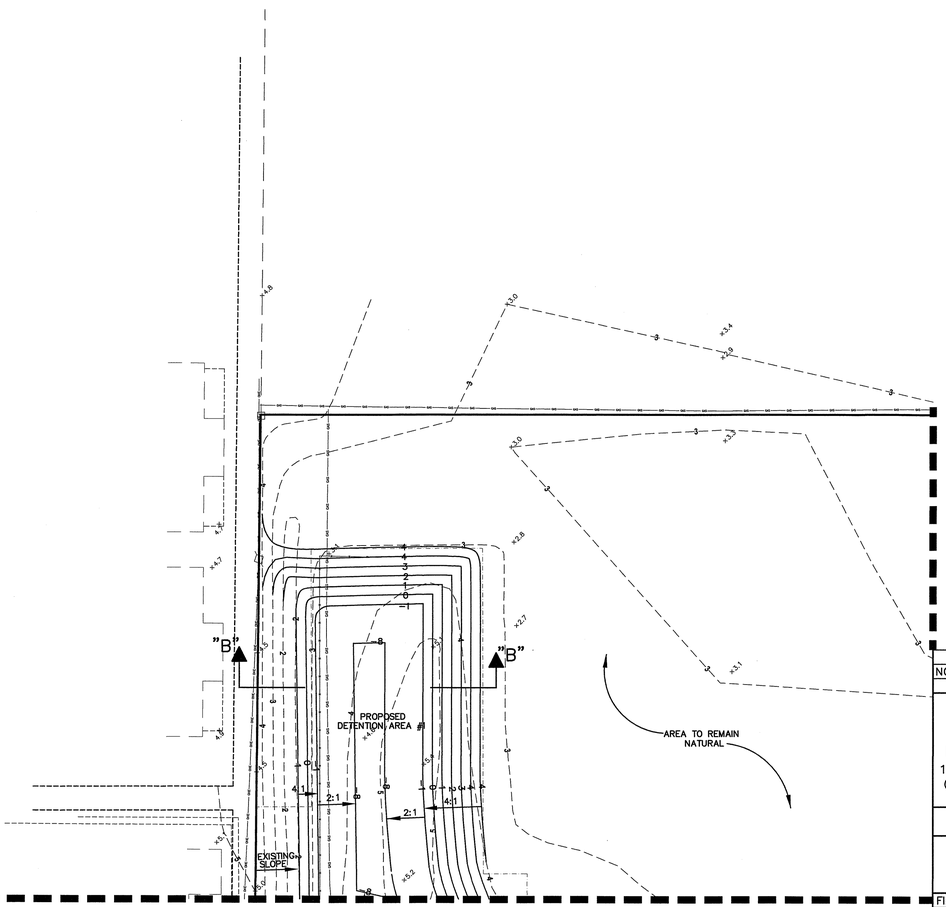

GRAPHIC SCALE

0 15 30 60 90

SCALE: 1" = 30'

LEGEND

x5.5	EXISTING GRADE
4	EXISTING CONTOUR
8.10	PROPOSED GRADE
9	PROPOSED CONTOUR
	PROPOSED DRAINAGE FLOW PATTERN
	1-1/2" TYPE S1 ACSC 8" LIMEROCK BASE (LBR 100) 10" STABILIZED SUBBASE (FBV-75 PSI OR LBR 40)

NO.	DATE	DESCRIPTION	BY

REVISIONS

PARKER MYNCHENBERG & ASSOCIATES, INC.

PROFESSIONAL ENGINEERS * LANDSCAPE ARCHITECTS

1729 RIDGEWOOD AVENUE HOLLY HILL, FLORIDA 32117

(386) 677-6891 FAX (386) 677-2114 E-MAIL: info@parkermynchenberg.com

CERTIFICATION OF AUTHORIZATION NUMBER: 00003910

CIVIL SITE PLAN

ORMOND RENAISSANCE CONDOMINIUM

ORMOND BEACH * FLORIDA

FILE NO. 13-49SP.DWG	DESIGNER: P.MYNCHENBERG
DATE: 12.12.13	CADD TECH: C.HARNDEN
SCALE: 1"=30'	SHEET 22 OF 48

SEAL

X:\Bruce Work\Bruce Work\RENAISSANCE\13-49 SITE PLAN JAN 15 REV 6.dwg, 2/27/2014 1:16:28 PM, HP Designjet T1200 44in HPGL2.pc3, Arch D (landscape), 1:30

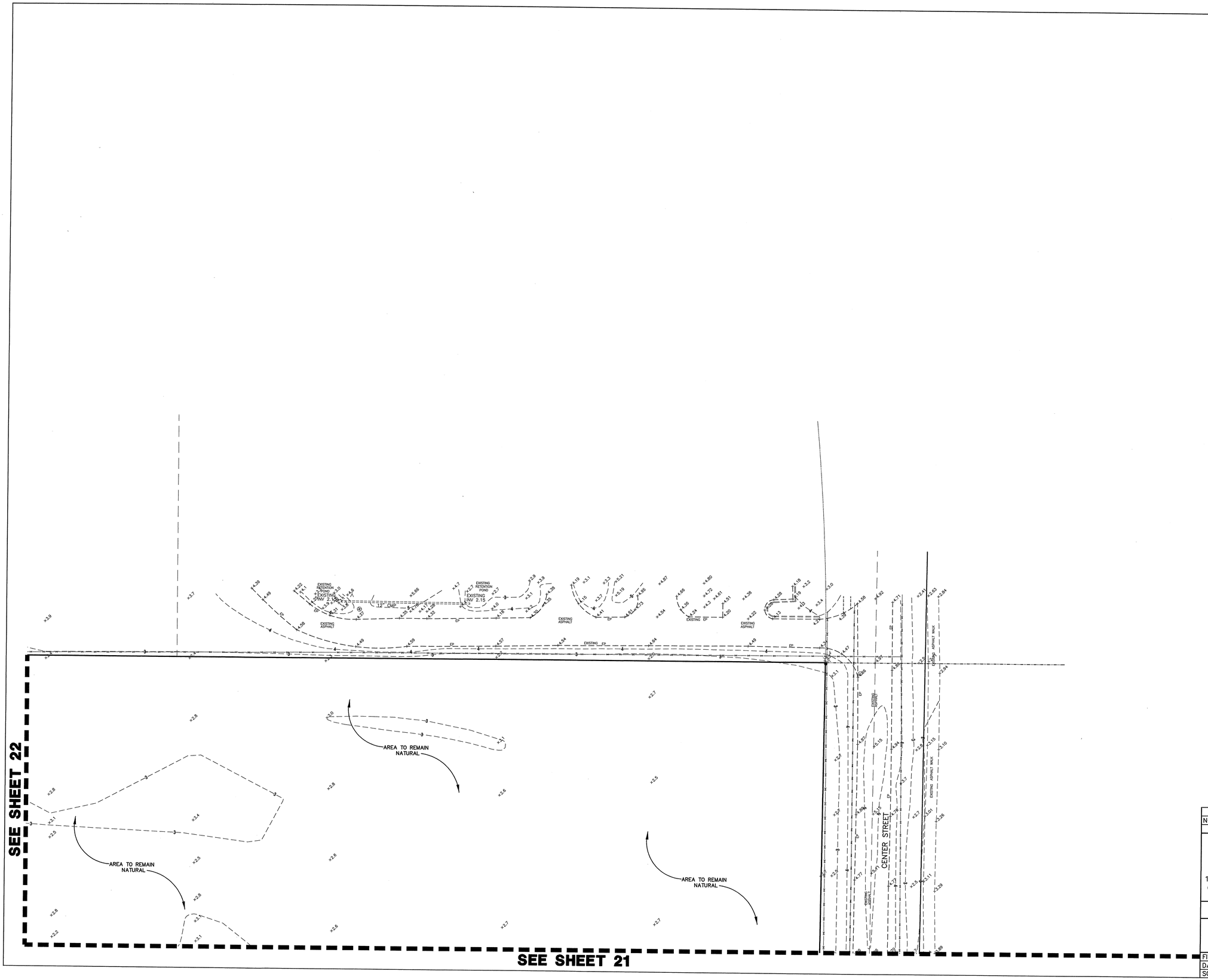

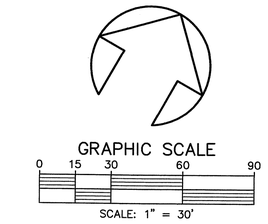

LEGEND

x4.5	EXISTING GRADE
— — 4 — — —	EXISTING CONTOUR
8.10	PROPOSED GRADE
—— 9 ——	PROPOSED CONTOUR
	PROPOSED DRAINAGE FLOW PATTERN
	1-1/2" TYPE S1 ACSC 8" LIMEROCK BASE (LBR 100) 10" STABILIZED SUBBASE (FBV-75 PSI OR LBR 40)

NO.	DATE	DESCRIPTION	BY

REVISIONS

PARKER MYNCHENBERG & ASSOCIATES, INC.

PROFESSIONAL ENGINEERS * LANDSCAPE ARCHITECTS

1729 RIDGEWOOD AVENUE HOLLY HILL, FLORIDA 32117

(386) 677-6891 FAX (386) 677-2114 E-MAIL: info@parkermynchenberg.com

CERTIFICATION OF AUTHORIZATION NUMBER: 00003910

CIVIL SITE PLAN

ORMOND RENAISSANCE CONDOMINIUM

ORMOND BEACH * FLORIDA

FILE NO. 13-49SP.DWG	DESIGNER: P.MYNCHENBERG
DATE: 12.12.13	CADD TECH: C.HARNDEN
SCALE: 1"=30'	SHEET 23 OF 48

SEAL

X:\Bruce Work\Bruce Work\RENAISSANCE\13-49 SITE PLAN JAN 15 REV 6.dwg, 2/27/2014 1:16:43 PM, HP Designjet TTIOO 44in HPGL2.pc3, Arch D (landscape), 1:30

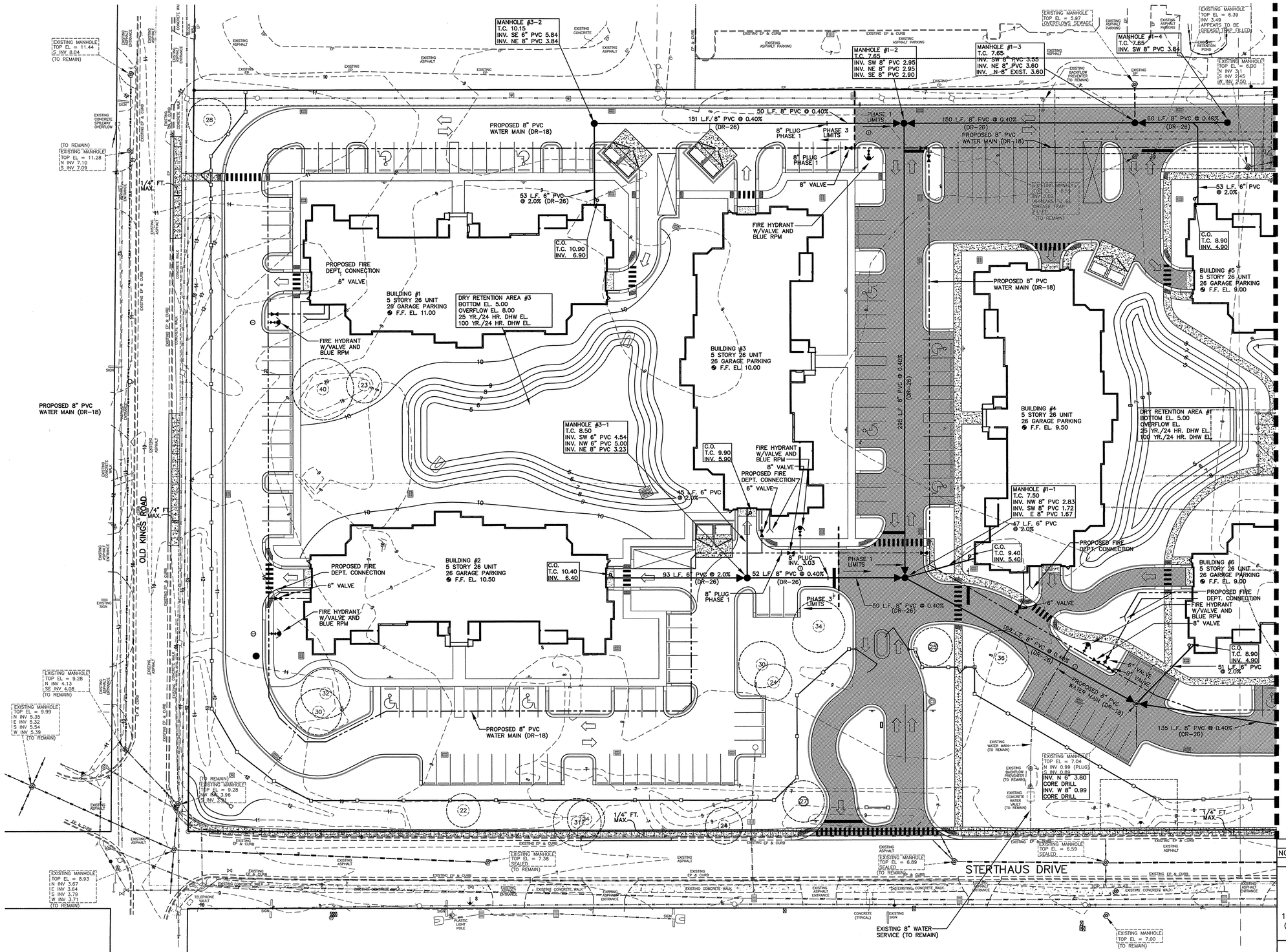

GRAPHIC SCALE

0 15 30 60 90

SCALE: 1" = 30'

NO.	DATE	DESCRIPTION	BY

REVISIONS

PARKER MYNCHENBERG & ASSOCIATES, INC.

PROFESSIONAL ENGINEERS * LANDSCAPE ARCHITECTS

1729 RIDGEWOOD AVENUE HOLLY HILL, FLORIDA 32117

(386) 677-6891 FAX (386) 677-2114 E-MAIL: info@parkermynchenberg.com

CERTIFICATION OF AUTHORIZATION NUMBER: 00003910

UTILITY PLAN

ORMOND RENAISSANCE CONDOMINIUM

ORMOND BEACH * FLORIDA

FILE NO. 13-49SP.DWG	DESIGNER: P.MYNCHENBERG	
DATE: 12.12.13	CADD TECH: C.HARNDEN	
SCALE: 1"=30'	SHEET 24 OF 48	SEAL

X:\Bruce Work\Bruce Work\RENAISSANCE\13-49 SITE PLAN JAN 15 REV 6.dwg, 2/27/2014 11:18:03 PM, HP Designjet T1100 44in HPGL2.pc3, Arch D (landscape), 1:30

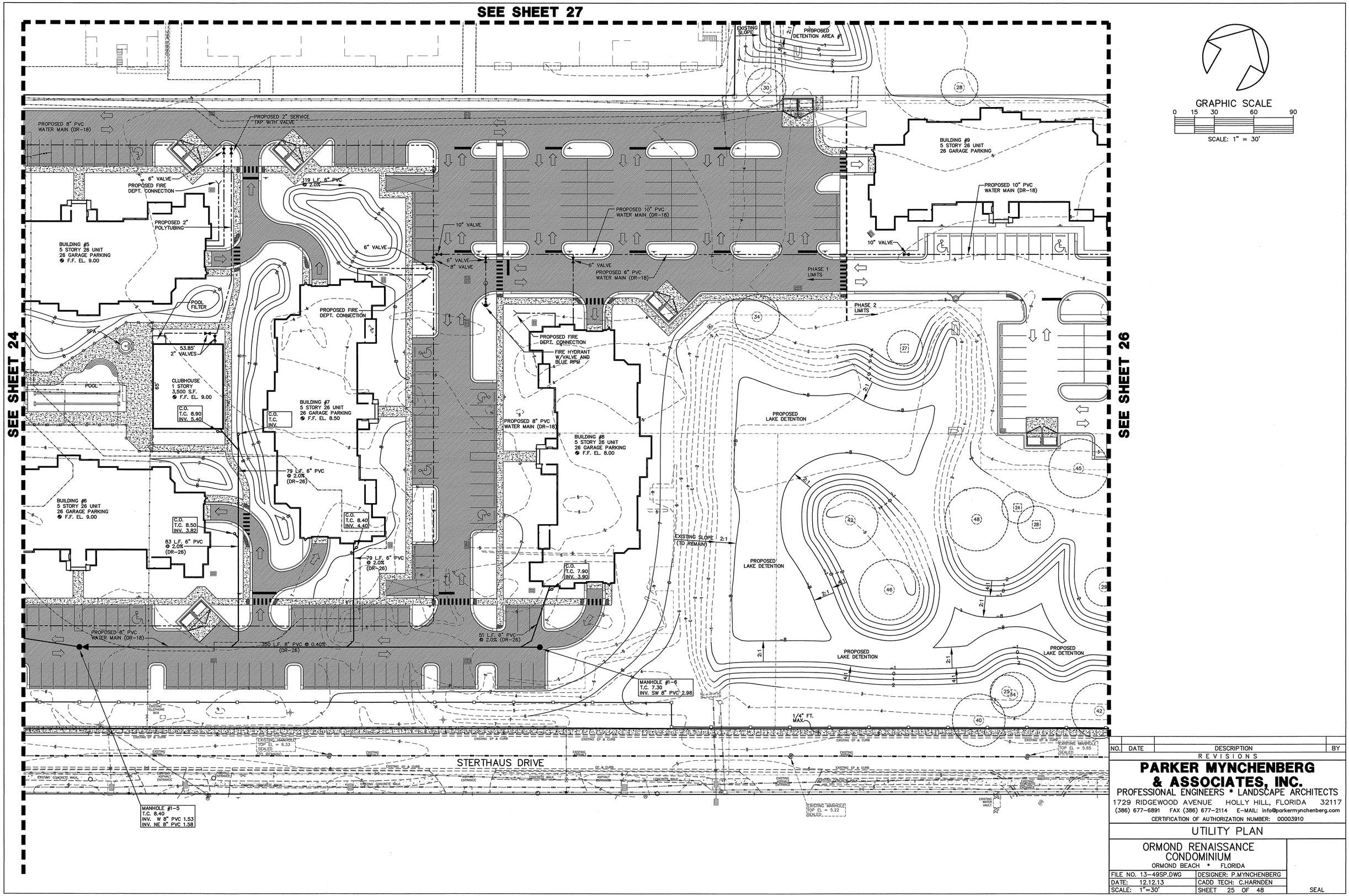

NO.	DATE	DESCRIPTION	BY

REVISIONS

PARKER MYNCHENBERG & ASSOCIATES, INC.

PROFESSIONAL ENGINEERS * LANDSCAPE ARCHITECTS

1729 RIDGEWOOD AVENUE HOLLY HILL, FLORIDA 32117

(386) 677-6891 FAX (386) 677-2114 E-MAIL: info@parkermynchenberg.com

CERTIFICATION OF AUTHORIZATION NUMBER: 00003910

UTILITY PLAN

ORMOND RENAISSANCE CONDOMINIUM

ORMOND BEACH * FLORIDA

FILE NO. 13-49SP.DWG	DESIGNER: P.MYNCHENBERG
DATE: 12.12.13	CADD TECH: C.HARNDEN
SCALE: 1"=30'	SHEET 25 OF 48

SEAL

X:\Bruce Work\Bruce Work\RENAISSANCE\13-49 SITE PLAN JAN 15 REV 6.dwg, 2/27/2014 1:18:18 PM, HP Designjet T1100 44in HPGL2.pc3, Arch D (landscape), 1:30

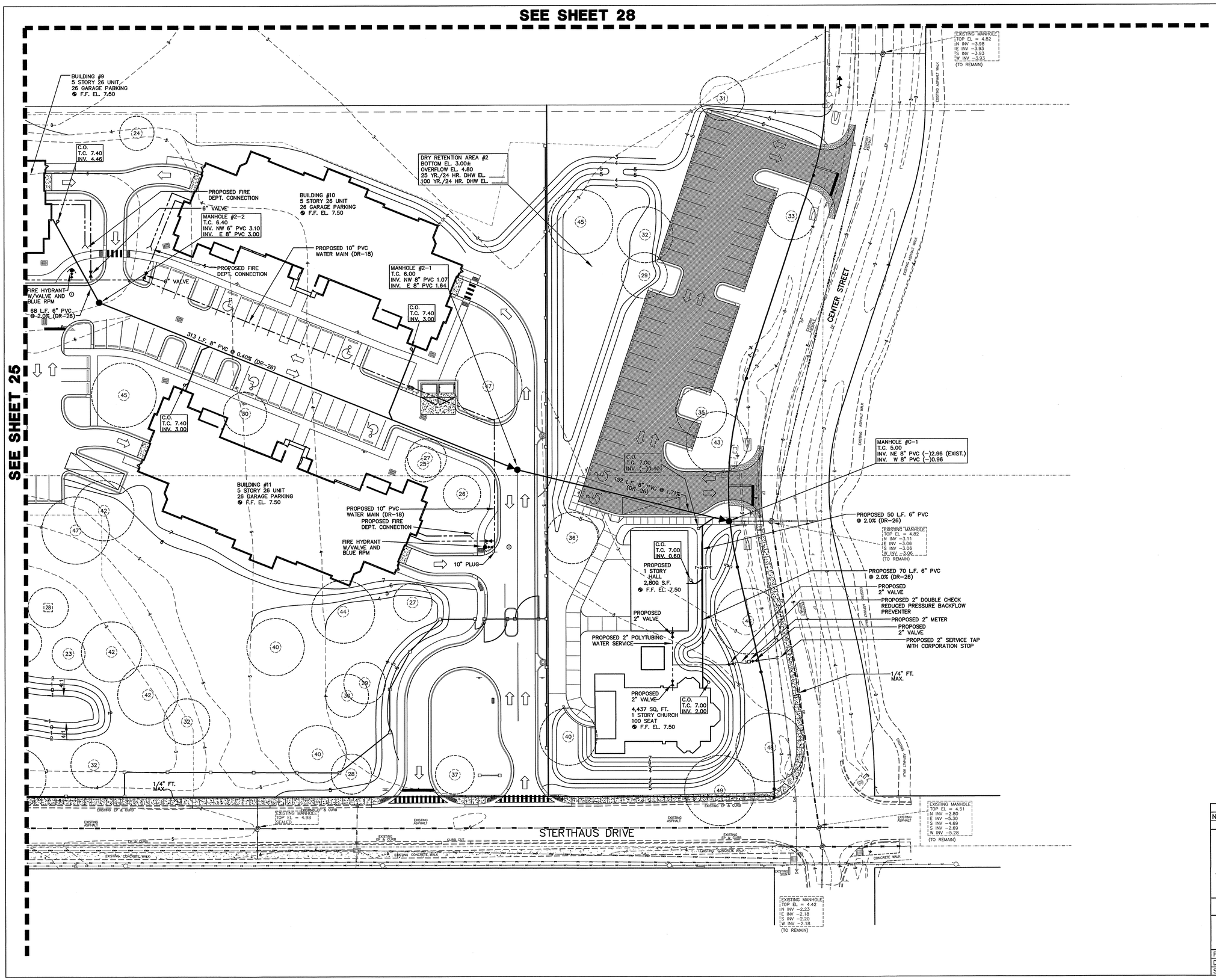

NO.	DATE	DESCRIPTION	BY

REVISIONS

PARKER MYNCHENBERG & ASSOCIATES, INC.

PROFESSIONAL ENGINEERS * LANDSCAPE ARCHITECTS

1729 RIDGEWOOD AVENUE HOLLY HILL, FLORIDA 32117

(386) 677-6891 FAX (386) 677-2114 E-MAIL: info@parkermynchenberg.com

CERTIFICATION OF AUTHORIZATION NUMBER: 00003910

UTILITY PLAN

ORMOND RENAISSANCE CONDOMINIUM

ORMOND BEACH * FLORIDA

FILE NO. 13-49SP.DWG	DESIGNER: P.MYNCHENBERG
DATE: 12.12.13	CADD TECH: C.HARNDEN
SCALE: 1"=30'	SHEET 26 OF 48

SEAL

X:\Bruce Work\Bruce Work\RENAISSANCE\13-49 SITE PLAN JAN 15 REV 6.dwg, 2/27/2014 1:18:43 PM, HP Designjet T1100 44in HPGL2.pc3, Arch D (landscape), 1:30

GRAPHIC SCALE

0 15 30 60 90

SCALE: 1" = 30'

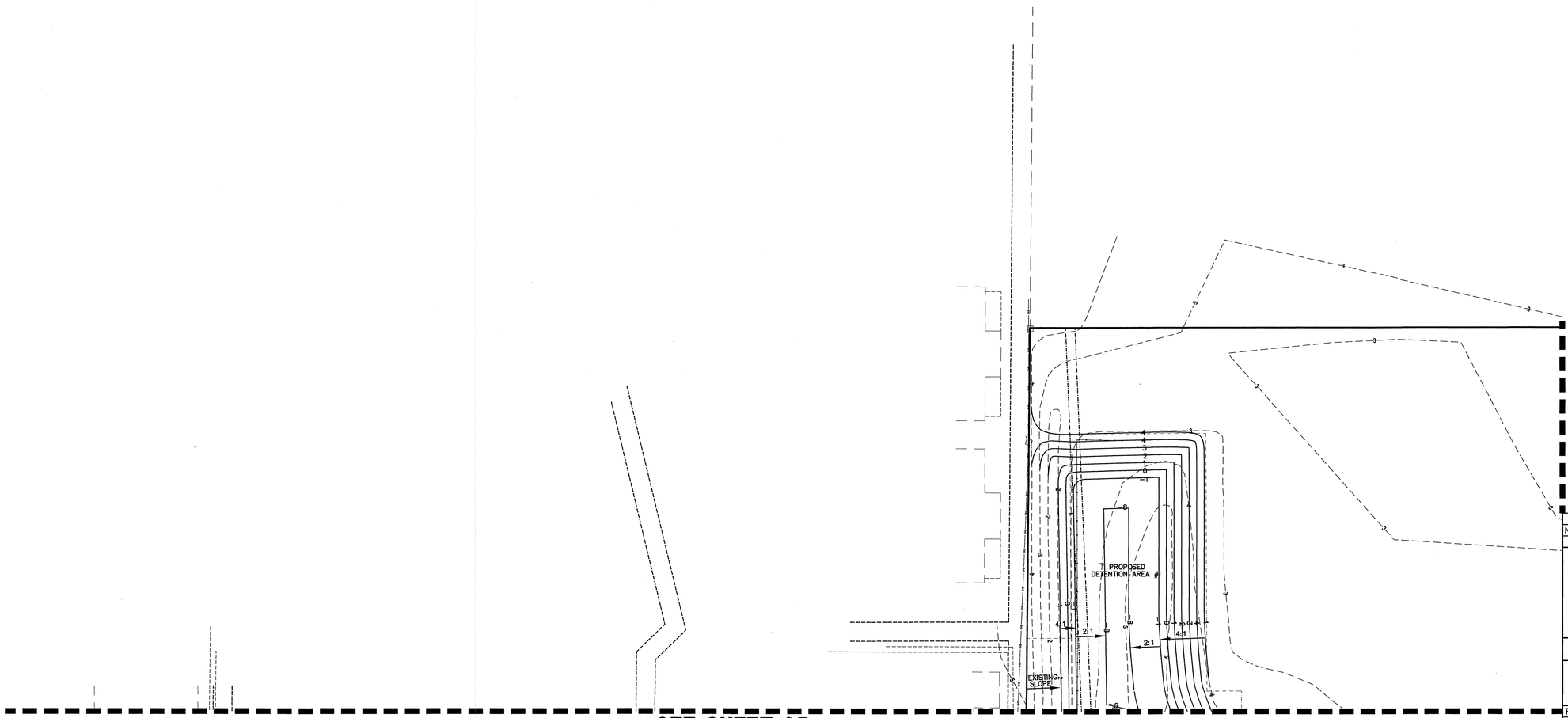

NO.	DATE	DESCRIPTION	BY

REVISIONS

PARKER MYNCHENBERG & ASSOCIATES, INC.

PROFESSIONAL ENGINEERS * LANDSCAPE ARCHITECTS

1729 RIDGEWOOD AVENUE HOLLY HILL, FLORIDA 32117

(386) 677-6891 FAX (386) 677-2114 E-MAIL: info@parkermynchenberg.com

CERTIFICATION OF AUTHORIZATION NUMBER: 00003910

UTILITY PLAN

ORMOND RENAISSANCE CONDOMINIUM

ORMOND BEACH * FLORIDA

FILE NO. 13-49SP.DWG	DESIGNER: P.MYNCHENBERG
DATE: 12.12.13	CADD TECH: C.HARNDEN
SCALE: 1"=30'	SHEET 27 OF 48

SEAL

X:\Bruce Work\Bruce Work\RENAISSANCE\13-49 SITE PLAN JAN 15 REV 6.dwg, 2/27/2014 1:19:03 PM, HP Designjet T1100 44in HPGL2.pc3, Arch D (Landscape), 1:30

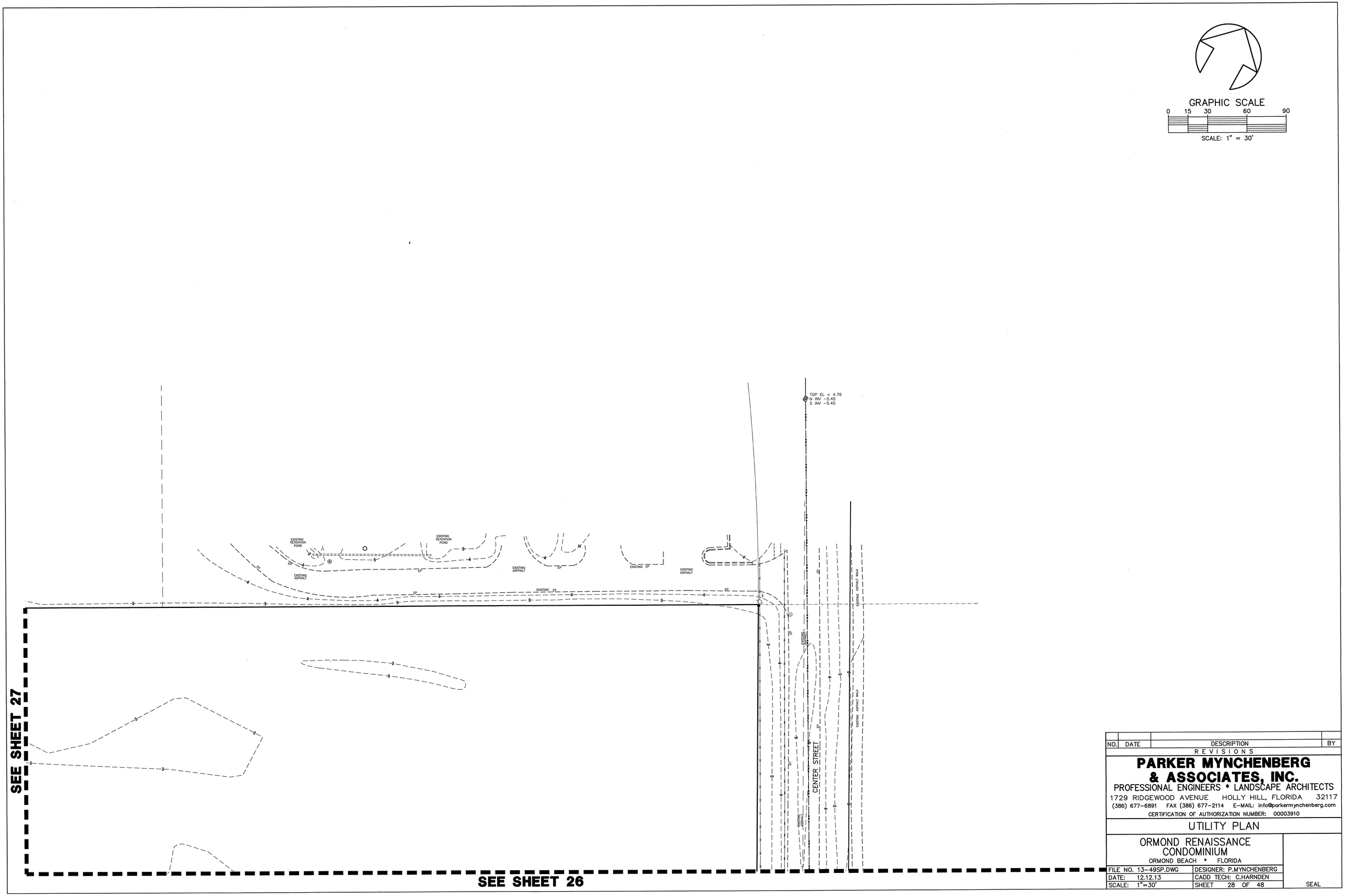

NO.	DATE	DESCRIPTION	BY

REVISIONS

PARKER MYNCHENBERG & ASSOCIATES, INC.

PROFESSIONAL ENGINEERS * LANDSCAPE ARCHITECTS

1729 RIDGEWOOD AVENUE HOLLY HILL, FLORIDA 32117

(386) 677-6891 FAX (386) 677-2114 E-MAIL: info@parkermynchenberg.com

CERTIFICATION OF AUTHORIZATION NUMBER: 00003910

UTILITY PLAN

ORMOND RENAISSANCE CONDOMINIUM

ORMOND BEACH * FLORIDA

FILE NO. 13-49SP.DWG	DESIGNER: P.MYNCHENBERG
DATE: 12.12.13	CADD TECH: C.HARNDEN
SCALE: 1"=30'	SHEET 28 OF 48

SEAL

X:\Bruce Work\Bruce Work\RENAISSANCE\13-49 SITE PLAN JAN 15 REV 6.dwg, 2/27/2014 1:19:23 PM, HP Designjet T1100 44in HPGL2.pc3, Arch D (landscape), 1:30

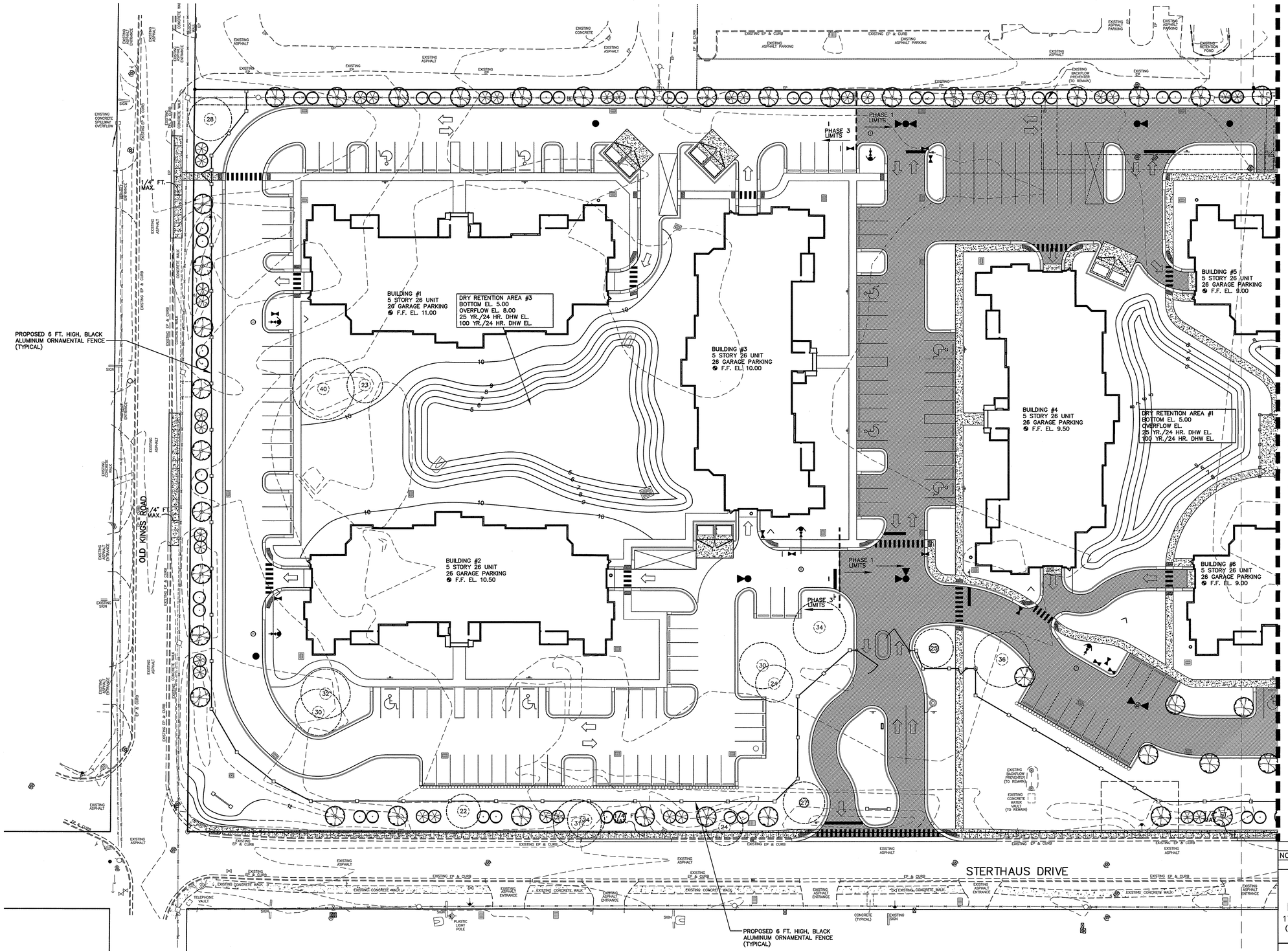

SEE SHEET 30

GRAPHIC SCALE

0 15 30 60 90

SCALE: 1" = 30'

NO.	DATE	DESCRIPTION	BY
		REVISIONS	

PARKER MYNCHENBERG & ASSOCIATES, INC.
PROFESSIONAL ENGINEERS * LANDSCAPE ARCHITECTS
1729 RIDGEWOOD AVENUE HOLLY HILL, FLORIDA 32117
(386) 677-6891 FAX (386) 677-2114 E-MAIL: info@parkermynchenberg.com
CERTIFICATION OF AUTHORIZATION NUMBER: 00003910

LANDSCAPE PLAN

ORMOND RENAISSANCE CONDOMINIUM
ORMOND BEACH * FLORIDA

FILE NO. 13-49SP.DWG	DESIGNER: P.MYNCHENBERG
DATE: 12.12.13	CADD TECH: C.HARNDEN
SCALE: 1"=30'	SHEET 29 OF 48

SEAL

X:\Bruce Work\Bruce Work\RENAISSANCE\13-49 SITE PLAN JAN 15 REV 6.dwg, 2/27/2014 1:23:38 PM, HP Designjet T1100 44in HPGL2.pc3, Arch D (landscape), 1:30

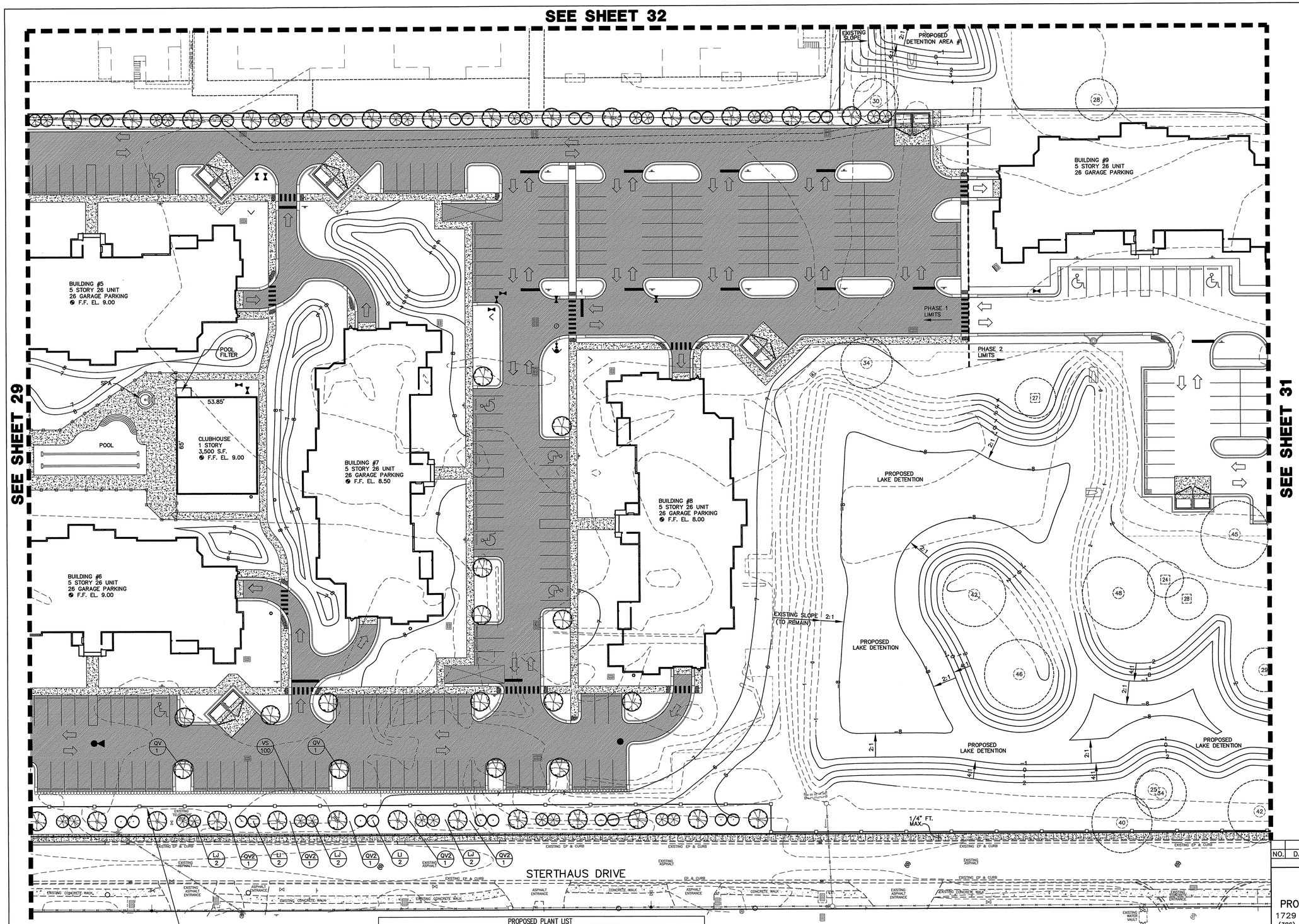

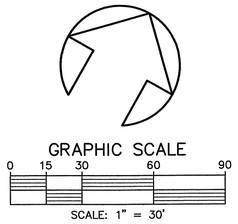

PROPOSED PLANT LIST

SYMBOL	ABB.	QTY.	BOTANICAL NAME	COMMON NAME	SIZE
○	VS	169	VIBURNUM SUSPENSUM	SANDANKWA VIBURNUM	7 GAL., 30" O.C.. 30" HT.
	LJ	–	LIGUSTRUM JAPONICUM	LIGUSTRUM TREE	30 GAL. MULTI-TRUNK, 6'-7' MIN HT., 30 GAL.
	LI	–	LAGERSTROEMIA INDICA	CREPE MYRTLE	MULTI-TRUNK, 6'-7' MIN HT., 30 GAL.
	QV	–	QUERCUS VIRGINIANA	LIVE OAK	2" MIN. CAL., 30 GAL.
	QV2	–	QUERCUS VIRGINIANA	LIVE OAK	4" MIN. CAL., 95 GAL.

NO.	DATE	DESCRIPTION	BY

REVISIONS

PARKER MYNCHENBERG & ASSOCIATES, INC.
PROFESSIONAL ENGINEERS * LANDSCAPE ARCHITECTS
1729 RIDGEWOOD AVENUE HOLLY HILL, FLORIDA 32117
(386) 677-6891 FAX (386) 677-2114 E-MAIL: info@parkermynchenberg.com
CERTIFICATION OF AUTHORIZATION NUMBER: 00003910

LANDSCAPE PLAN

ORMOND RENAISSANCE CONDOMINIUM
ORMOND BEACH * FLORIDA

FILE NO. 13-49SP.DWG	DESIGNER: P.MYNCHENBERG
DATE: 12.12.13	CADD TECH: C.HARNDEN
SCALE: 1"=30'	SHEET 30 OF 48

SEAL

X:\Bruce Work\Bruce Work\RENAISSANCE\13-49 SITE PLAN JAN 15 REV 6.dwg, 2/27/2014 1:24:06 PM, HP Designjet T1100 44in HPGL2.pc3, Arch D (landscape), 1:30

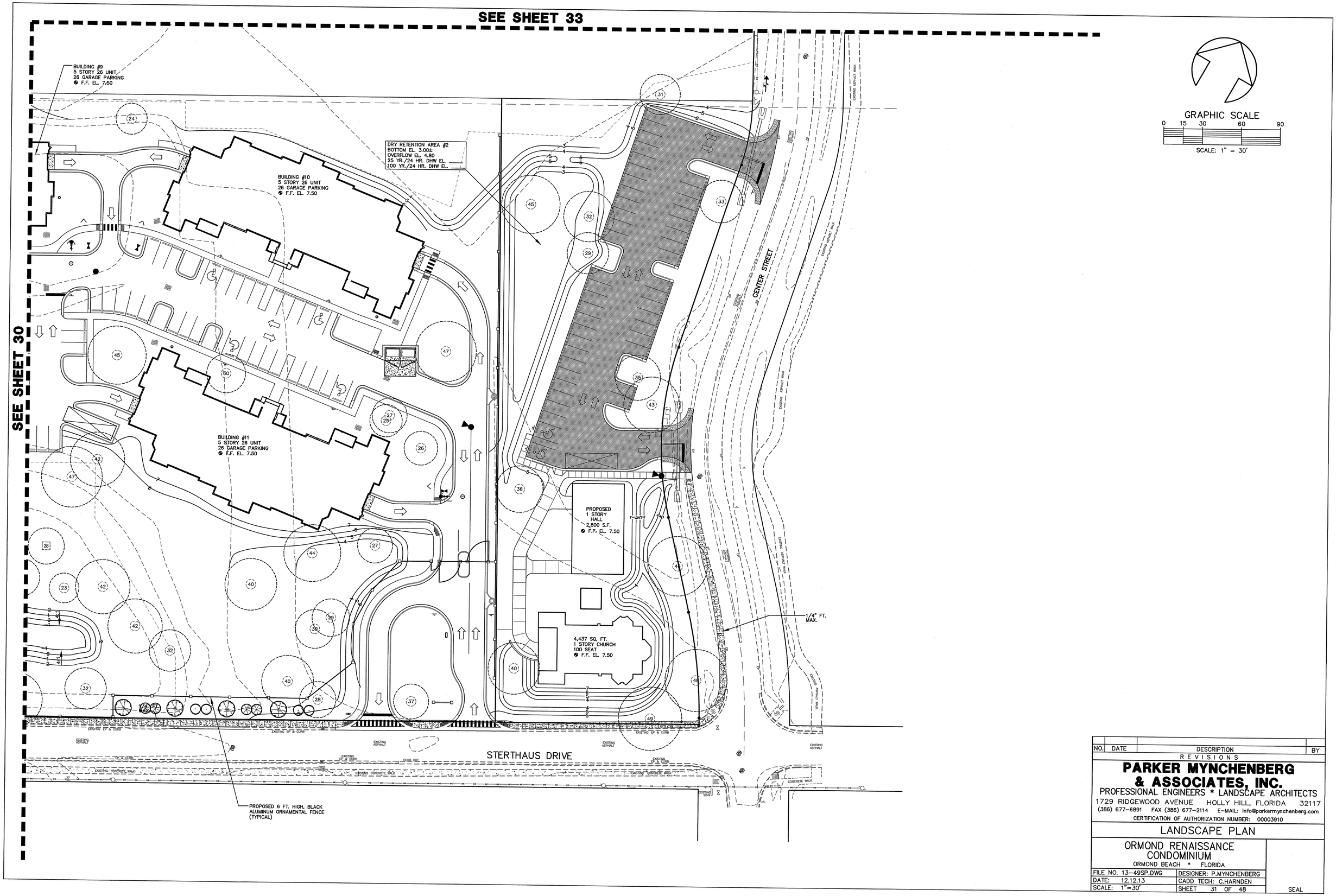

NO.	DATE	DESCRIPTION	BY
		REVISIONS	

PARKER MYNCHENBERG & ASSOCIATES, INC.

PROFESSIONAL ENGINEERS * LANDSCAPE ARCHITECTS

1729 RIDGEWOOD AVENUE HOLLY HILL, FLORIDA 32117

(386) 677-6891 FAX (386) 677-2114 E-MAIL: info@parkermynchenberg.com

CERTIFICATION OF AUTHORIZATION NUMBER: 00003910

LANDSCAPE PLAN

ORMOND RENAISSANCE CONDOMINIUM

ORMOND BEACH * FLORIDA

FILE NO. 13-49SP.DWG	DESIGNER: P.MYNCHENBERG
DATE: 12.12.13	CADD TECH: C.HARNDEN
SCALE: 1"=30'	SHEET 31 OF 48

SEAL

X:\Bruce Work\Bruce Work\RENAISSANCE\13-49 SITE PLAN JAN 15 REV 6.dwg, 2/27/2014 1:24:26 PM, HP Designjet T1100 44in HPGL2 pc3, Arch D (landscape), 1:30

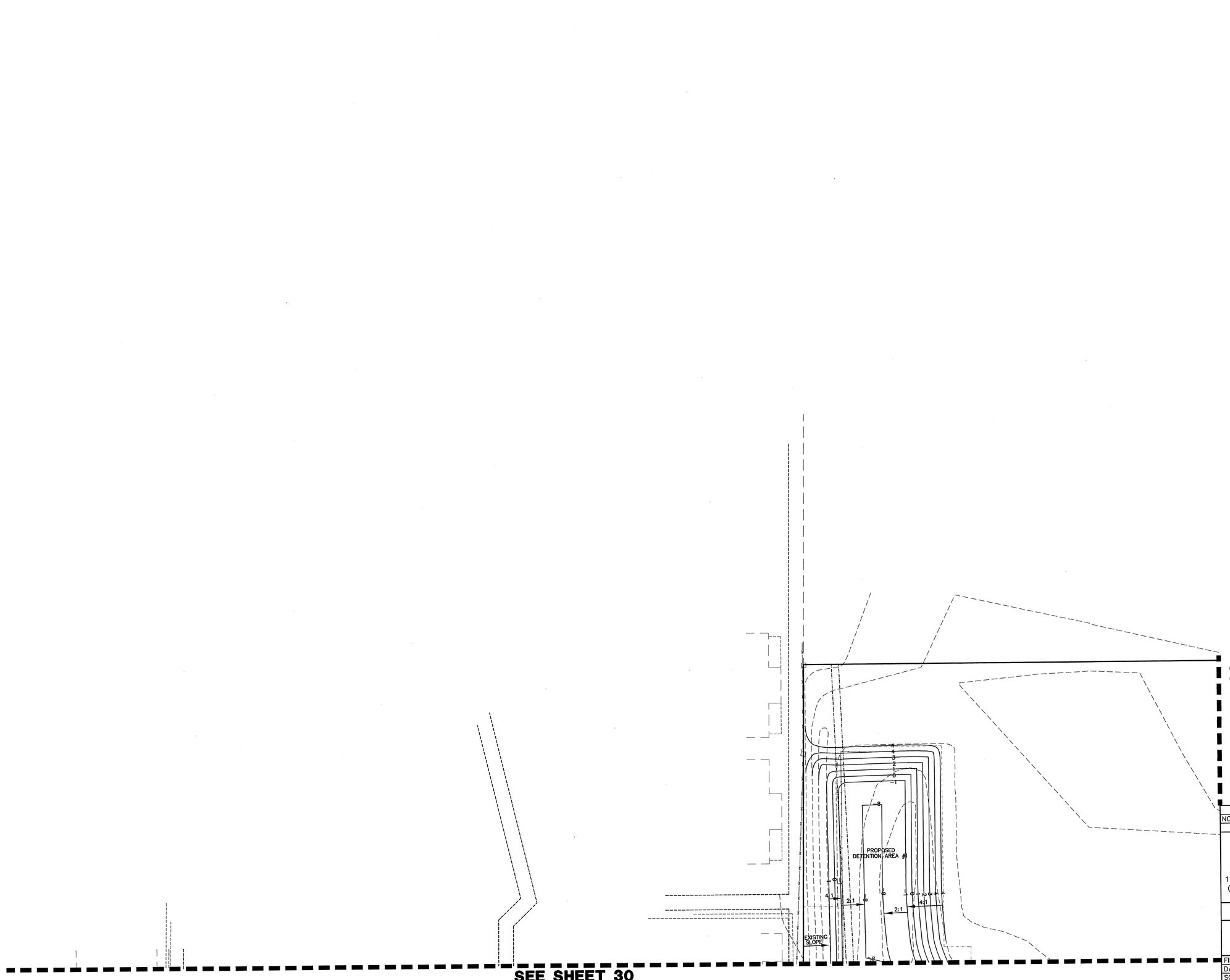

NO.	DATE	DESCRIPTION	BY

REVISIONS

PARKER MYNCHENBERG & ASSOCIATES, INC.
PROFESSIONAL ENGINEERS * LANDSCAPE ARCHITECTS
1729 RIDGEWOOD AVENUE HOLLY HILL, FLORIDA 32117
(386) 677-6891 FAX (386) 677-2114 E-MAIL: info@parkermynchenberg.com
CERTIFICATION OF AUTHORIZATION NUMBER: 00003910

LANDSCAPE PLAN

ORMOND RENAISSANCE CONDOMINIUM
ORMOND BEACH * FLORIDA

FILE NO. 13-49SP.DWG	DESIGNER: P.MYNCHENBERG
DATE: 12.12.13	CADD TECH: C.HARNDEN
SCALE: 1"=30'	SHEET 32 OF 48

SEAL

X:\Bruce Work\Bruce Work\RENAISSANCE\13-49 SITE PLAN JAN 15 REV 6.dwg, 2/27/2014 1:24:47 PM, HP Designjet T1100 44in HPGL2.pc3, Arch D (landscape), 1:30

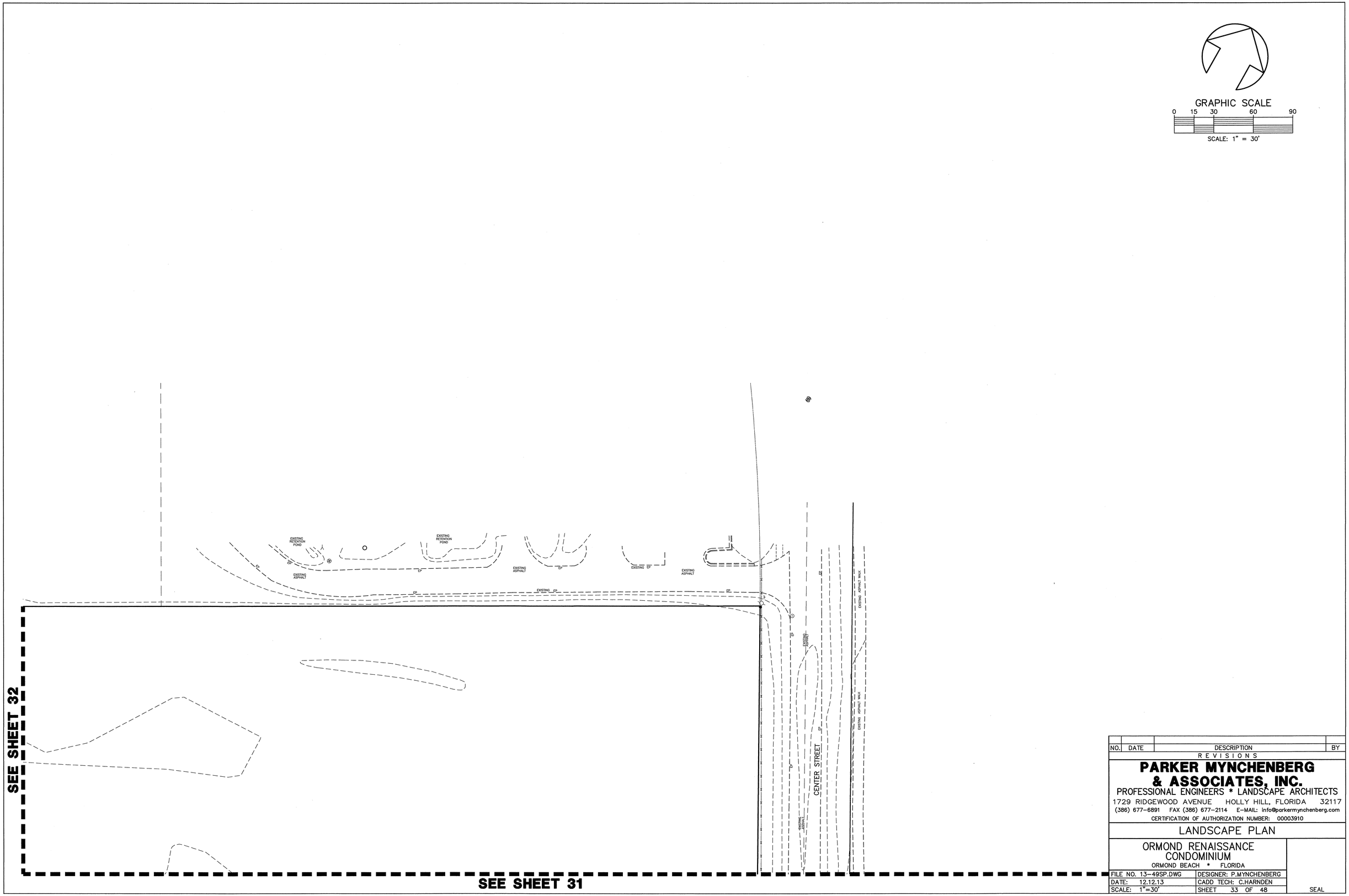

NO.	DATE	DESCRIPTION	BY
		REVISIONS	

PARKER MYNCHENBERG & ASSOCIATES, INC.

PROFESSIONAL ENGINEERS * LANDSCAPE ARCHITECTS

1729 RIDGEWOOD AVENUE HOLLY HILL, FLORIDA 32117

(386) 677-6891 FAX (386) 677-2114 E-MAIL: info@parkermynchenberg.com

CERTIFICATION OF AUTHORIZATION NUMBER: 00003910

LANDSCAPE PLAN

ORMOND RENAISSANCE CONDOMINIUM

ORMOND BEACH * FLORIDA

FILE NO. 13-49SP.DWG	DESIGNER: P.MYNCHENBERG
DATE: 12.12.13	CADD TECH: C.HARNDEN
SCALE: 1"=30'	SHEET 33 OF 48

SEAL

X:\Bruce Work\Bruce Work\RENAISSANCE\13-49 SITE PLAN JAN 15 REV 6.dwg, 2/27/2014 1:25:08 PM, HP Designjet T1100 44in HPGL2.pc3, Arch D (landscape), 1:30

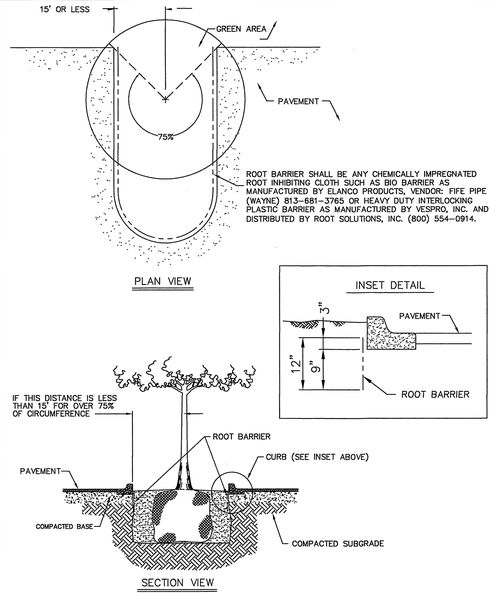

STANDARD CONSTRUCTION DETAIL
ROOT BARRIER
NTS

INDEX LS-1 JAN. 2012

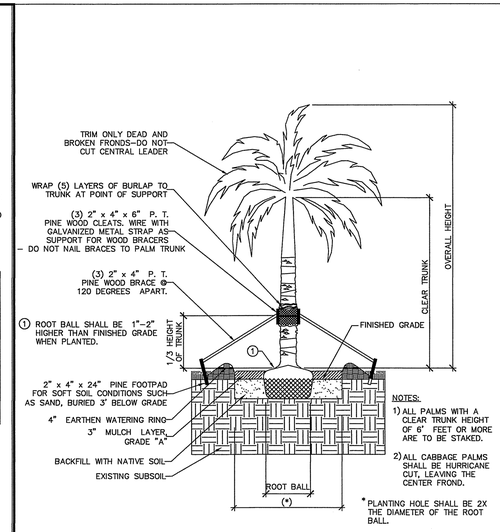

STANDARD CONSTRUCTION DETAIL
STRAIGHT TRUNK PALM PLANTING DETAIL
NTS

INDEX LS-6 JAN. 2012

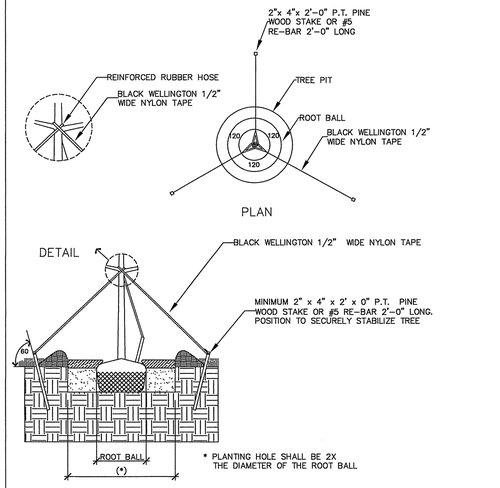

STANDARD CONSTRUCTION DETAIL
TYPICAL TREE GUYING DETAIL
NTS.

INDEX LS-7 JAN. 2012

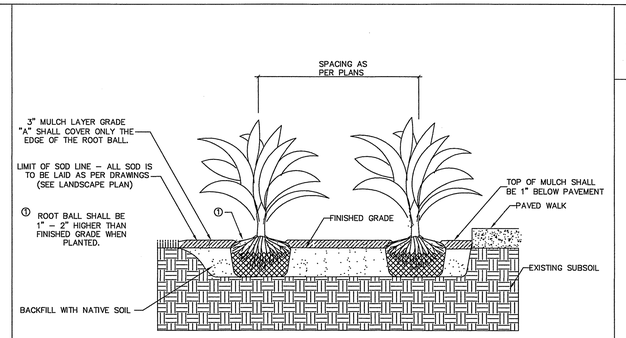

STANDARD CONSTRUCTION DETAIL
TYPICAL GROUND COVER DETAIL
NTS

INDEX LS-12 JAN. 2012

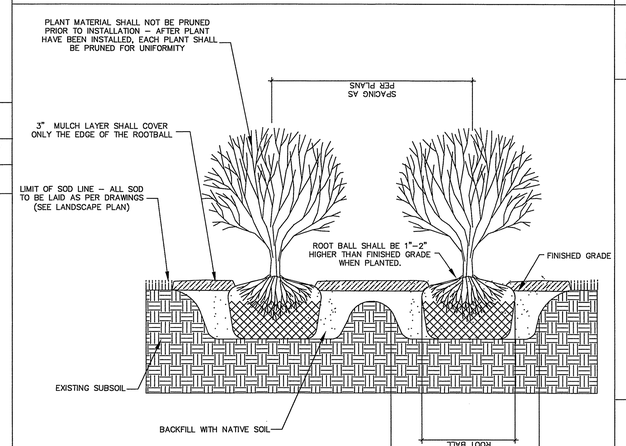

STANDARD CONSTRUCTION DETAIL
TYPICAL SHRUB PLANTING DETAIL
NTS

INDEX LS-8 JAN. 2012

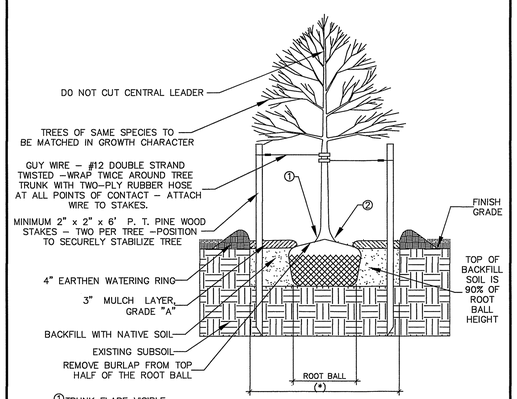

STANDARD CONSTRUCTION DETAIL
SMALL TREE PLANTING DETAIL
NTS.

INDEX LS-9 JAN. 2012

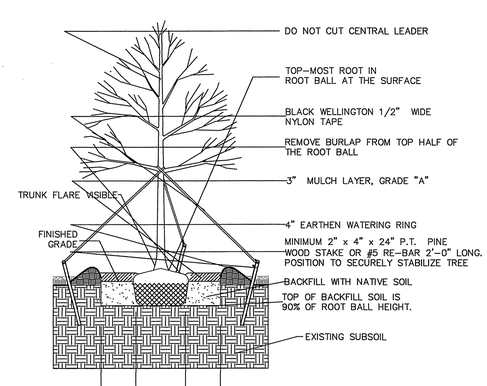

STANDARD CONSTRUCTION DETAIL
LARGE TREE PLANTING DETAILS
NTS.

INDEX LS-10 JAN 2012

NO.	DATE	DESCRIPTION	BY

REVISIONS

PARKER MYNCHENBERG & ASSOCIATES, INC.

PROFESSIONAL ENGINEERS * LANDSCAPE ARCHITECTS
1729 RIDGEWOOD AVENUE HOLLY HILL, FLORIDA 32117
(386)677-6891 FAX(386)677-2114 E-MAIL: info@parkermynchenberg.com
CERTIFICATE OF AUTHORIZATION NUMBER: 00003910

LANDSCAPE DETAILS

ORMOND RENAISSANCE CONDOMINIUM
ORMOND BEACH * FLORIDA

FILE NO. 13-49LID.DWG	DESIGNER: P.MYNCHENBERG	
DATE: 12.12.13	CADD TECH: C.HARNDEN	
SCALE: NONE	SHEET 34 OF 48	SEAL

X:\Bruce Work\Bruce Work\RENAISSANCE\RENAISSANCE15-49LID.dwg, 2/10/2014 1:39:51 PM, HP Designjet T1100 44in HPGL2.pc3, Arch D (landscape), 1:1

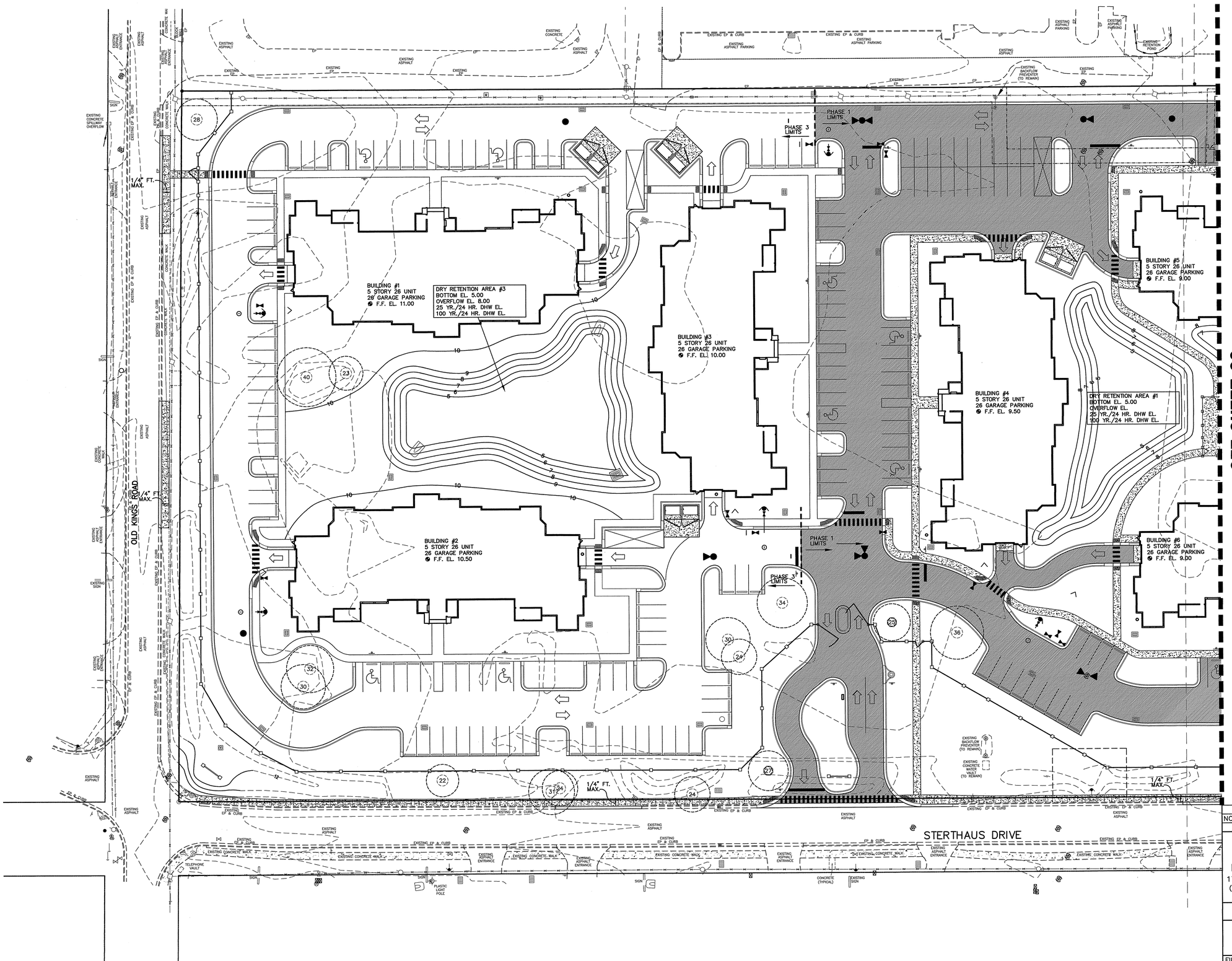

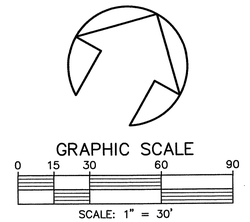

SEE SHEET 36

NO.	DATE	DESCRIPTION	BY

REVISIONS

PARKER MYNCHENBERG & ASSOCIATES, INC.

PROFESSIONAL ENGINEERS * LANDSCAPE ARCHITECTS

1729 RIDGEWOOD AVENUE HOLLY HILL, FLORIDA 32117

(386) 677-6891 FAX (386) 677-2114 E-MAIL: info@parkermynchenberg.com

CERTIFICATION OF AUTHORIZATION NUMBER: 00003910

IRRIGATION PLAN

ORMOND RENAISSANCE CONDOMINIUM

ORMOND BEACH * FLORIDA

FILE NO. 13-49SP.DWG	DESIGNER: P.MYNCHENBERG
DATE: 12.12.13	CADD TECH: C.HARNDEN
SCALE: 1"=30'	SHEET 35 OF 48

SEAL

X:\Bruce Work\Bruce Work\RENAISSANCE\13-49 SITE PLAN JAN 15 REV 6.dwg, 2/27/2014 1:25:49 PM, HP Designjet T1100 44in HPGL2.pc3, Arch D (landscape), 1:30

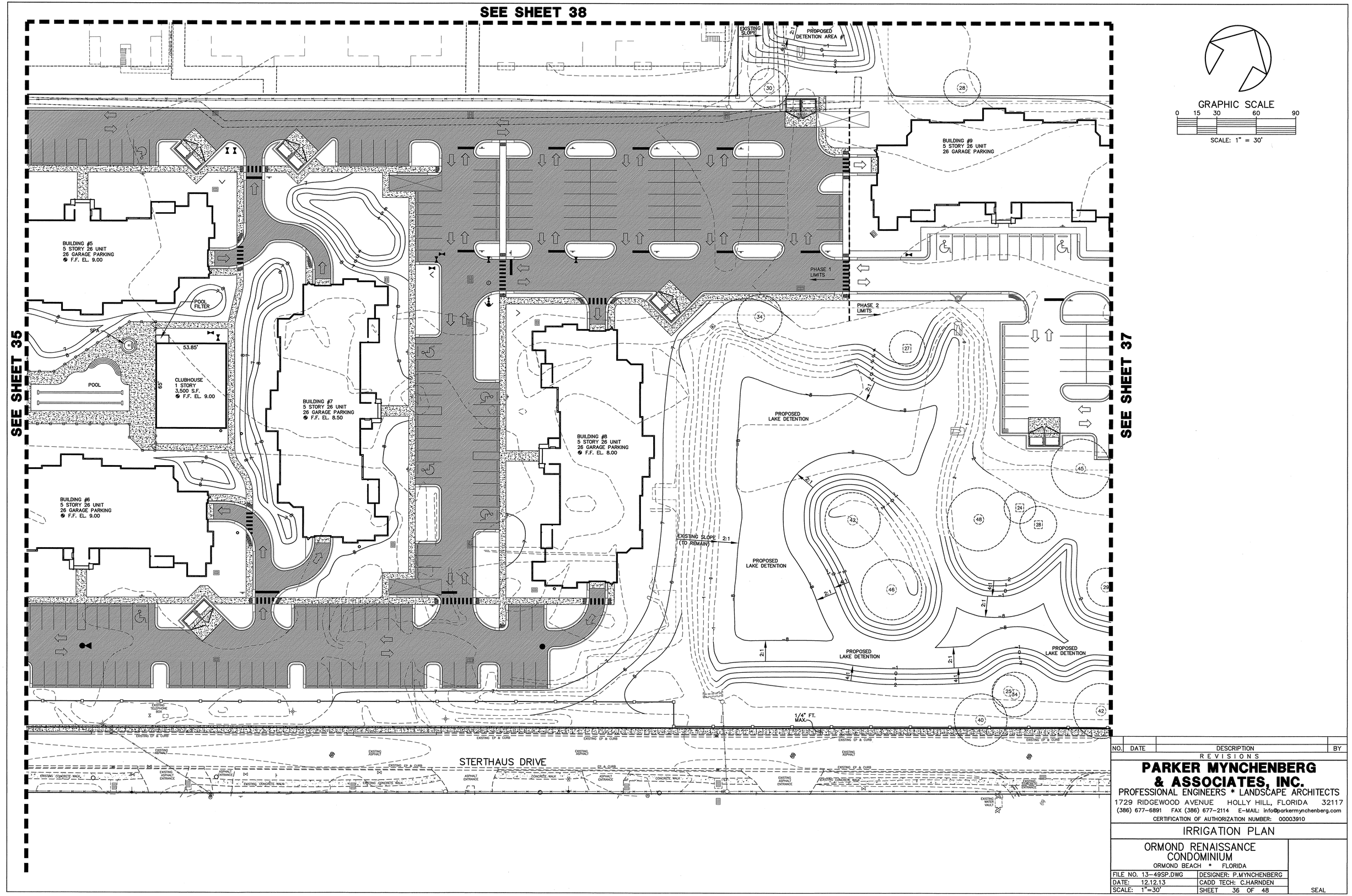

NO.	DATE	DESCRIPTION	BY

REVISIONS

PARKER MYNCHENBERG & ASSOCIATES, INC.
PROFESSIONAL ENGINEERS * LANDSCAPE ARCHITECTS
1729 RIDGEWOOD AVENUE HOLLY HILL, FLORIDA 32117
(386) 677-6891 FAX (386) 677-2114 E-MAIL: info@parkermynchenberg.com
CERTIFICATION OF AUTHORIZATION NUMBER: 00003910

IRRIGATION PLAN

ORMOND RENAISSANCE CONDOMINIUM
ORMOND BEACH * FLORIDA

FILE NO. 13-49SP.DWG	DESIGNER: P.MYNCHENBERG
DATE: 12.12.13	CADD TECH: C.HARNDEN
SCALE: 1"=30'	SHEET 36 OF 48

SEAL

X:\Bruce Work\Bruce Work\RENAISSANCE\13-49 SITE PLAN JAN 15 REV 6.dwg, 2/27/2014 1:26:07 PM, HP Designjet T1100 44in HPGL2.pc3, Arch D (landscape), 1:30

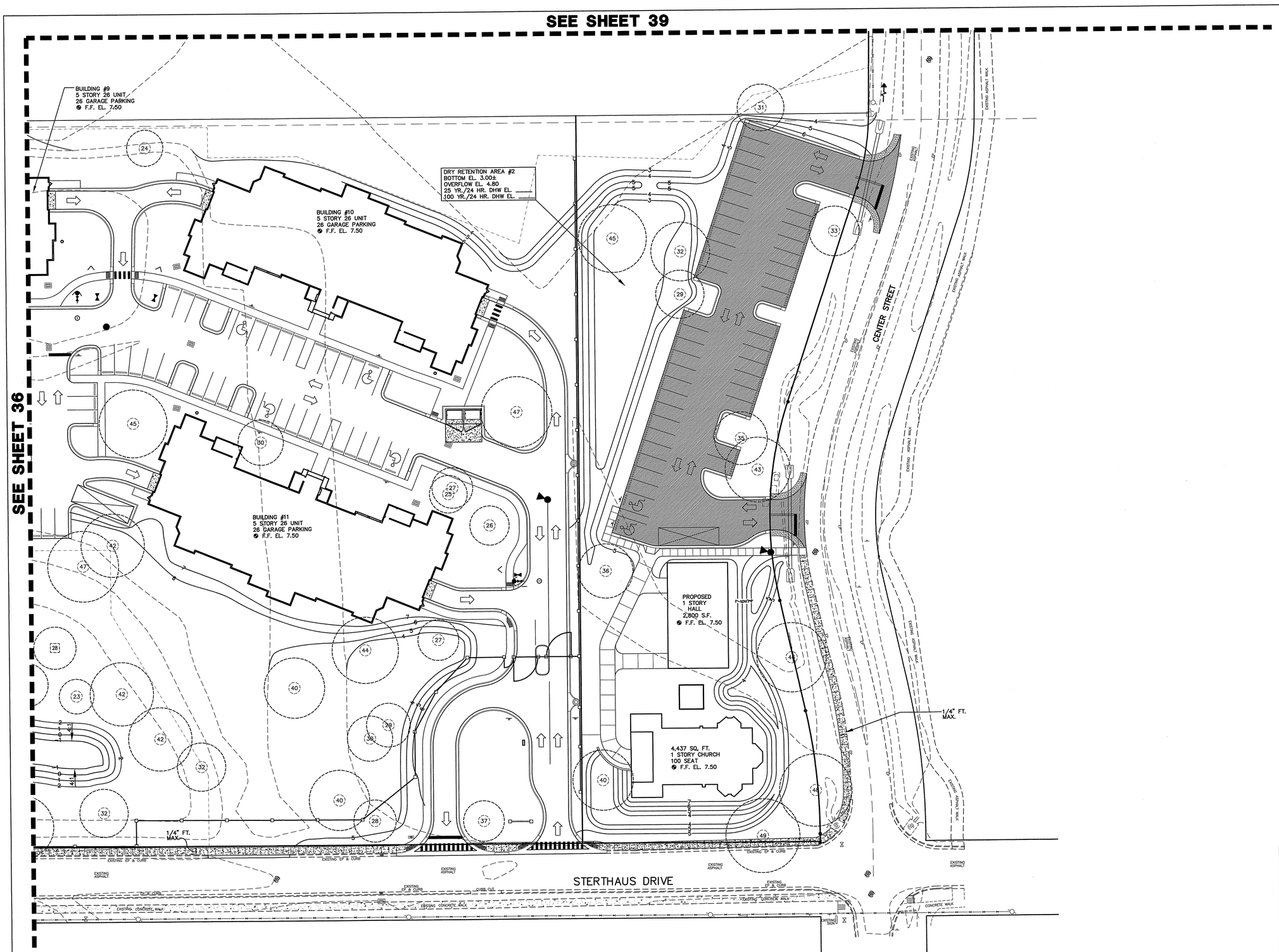

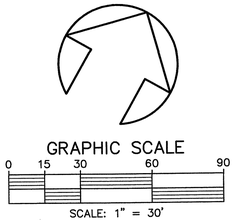

NO.	DATE	DESCRIPTION	BY

REVISIONS

PARKER MYNCHENBERG & ASSOCIATES, INC.

PROFESSIONAL ENGINEERS * LANDSCAPE ARCHITECTS

1729 RIDGEWOOD AVENUE HOLLY HILL, FLORIDA 32117

(386) 677-6891 FAX (386) 677-2114 E-MAIL: info@parkermynchenberg.com

CERTIFICATION OF AUTHORIZATION NUMBER: 00003910

IRRIGATION PLAN

ORMOND RENAISSANCE CONDOMINIUM

ORMOND BEACH * FLORIDA

FILE NO. 13-49SP.DWG	DESIGNER: P.MYNCHENBERG
DATE: 12.12.13	CADD TECH: C.HARNDEN
SCALE: 1"=30'	SHEET 37 OF 48

SEAL

X:\Bruce Work\Bruce Work\RENAISSANCE\13-49 SITE PLAN JAN 15 REV 6.dwg, 2/27/2014 1:26:30 PM, HP Designjet T1100 44in HPGL2.pc3, Arch D (landscape), 1:30

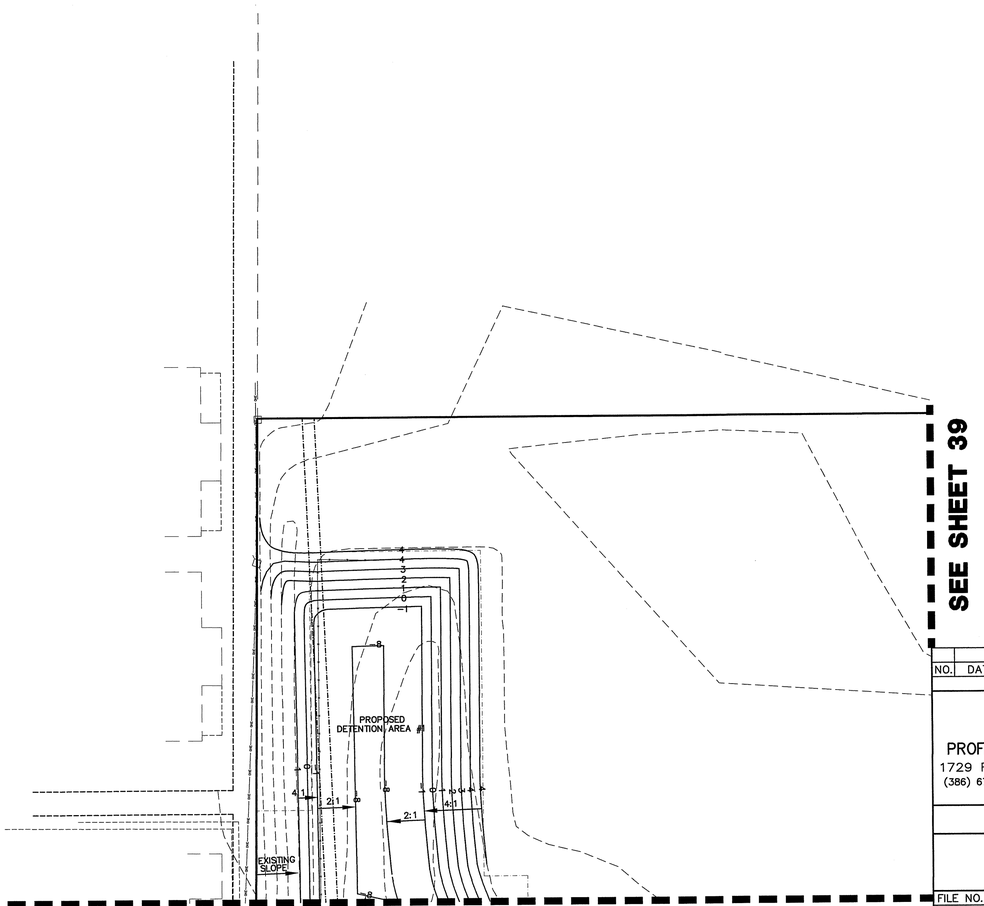

NO.	DATE	DESCRIPTION	BY

REVISIONS

PARKER MYNCHENBERG & ASSOCIATES, INC.

PROFESSIONAL ENGINEERS * LANDSCAPE ARCHITECTS

1729 RIDGEWOOD AVENUE HOLLY HILL, FLORIDA 32117

(386) 677-6891 FAX (386) 677-2114 E-MAIL: info@parkermynchenberg.com

CERTIFICATION OF AUTHORIZATION NUMBER: 00003910

IRRIGATION PLAN

ORMOND RENAISSANCE CONDOMINIUM

ORMOND BEACH * FLORIDA

FILE NO. 13-49SP.DWG	DESIGNER: P.MYNCHENBERG
DATE: 12.12.13	CADD TECH: C.HARNDEN
SCALE: 1"=30'	SHEET 38 OF 48

SEAL

K:\Bruce Work\Bruce Work\RENAISSANCE\13-49 SITE PLAN\ JAN 15 REV 4.dwg, 2/27/2014 1:26:54 PM, HP Designjet T770D 44in HPGL2.pc3, Arch D (Landscape), 1:30

NO.	DATE	DESCRIPTION	BY

REVISIONS

PARKER MYNCHENBERG & ASSOCIATES, INC.

PROFESSIONAL ENGINEERS * LANDSCAPE ARCHITECTS

1729 RIDGEWOOD AVENUE HOLLY HILL, FLORIDA 32117

(386) 677-6891 FAX (386) 677-2114 E-MAIL: info@parkermynchenberg.com

CERTIFICATION OF AUTHORIZATION NUMBER: 00003910

IRRIGATION PLAN

ORMOND RENAISSANCE CONDOMINIUM

ORMOND BEACH * FLORIDA

FILE NO. 13-49SP.DWG	DESIGNER: P.MYNCHENBERG
DATE: 12.12.13	CADD TECH: C.HARNDEN
SCALE: 1"=30'	SHEET 39 OF 48

SEAL

X:\Bruce Work\Bruce Work\RENAISSANCE\13-49 SITE PLAN JAN 15 REV 6.dwg, 2/27/2014 1:27:09 PM, HP Designjet T1100 44in HPGL2.pc3, Arch D (Landscape), 1:20

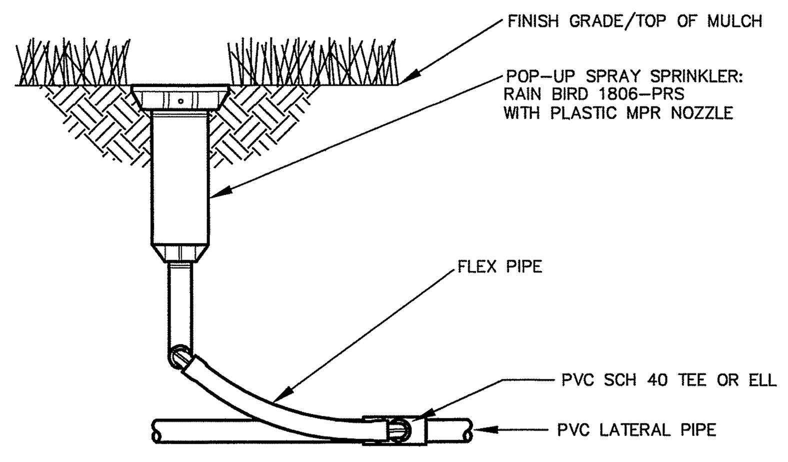

MODEL 1806-PRS 6" POP-UP

FIXED-SPRAY (MPR SERIES), FLEX PIPE, PRESSURE REGULATING

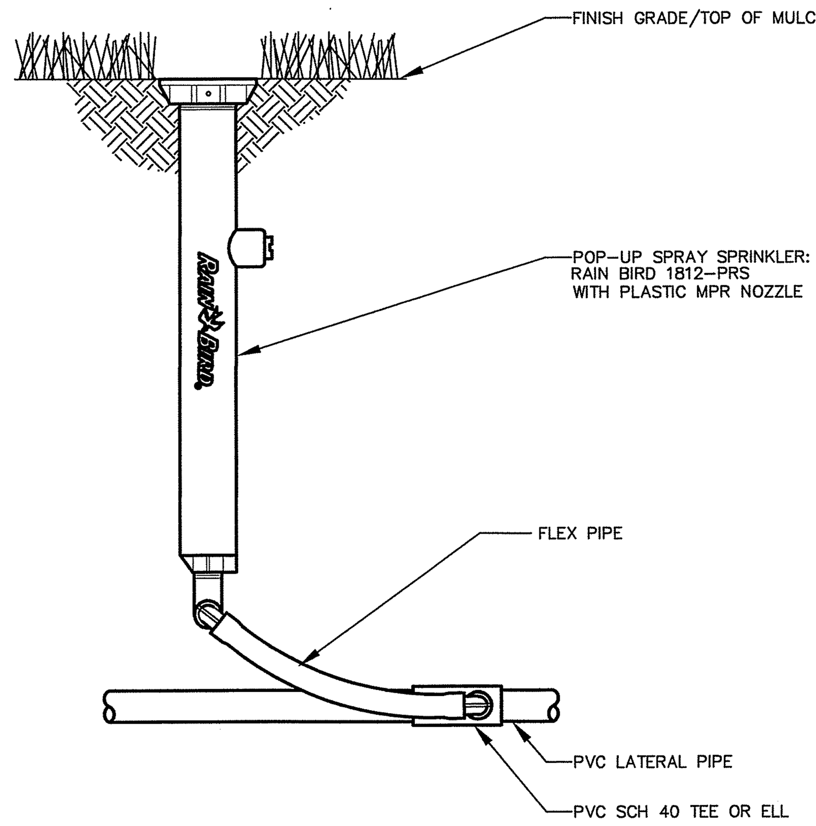

MODEL 1812-PRS 12" POP-UP

FIXED-SPRAY (MPR SERIES), FLEX PIPE, PRESSURE REGULATING

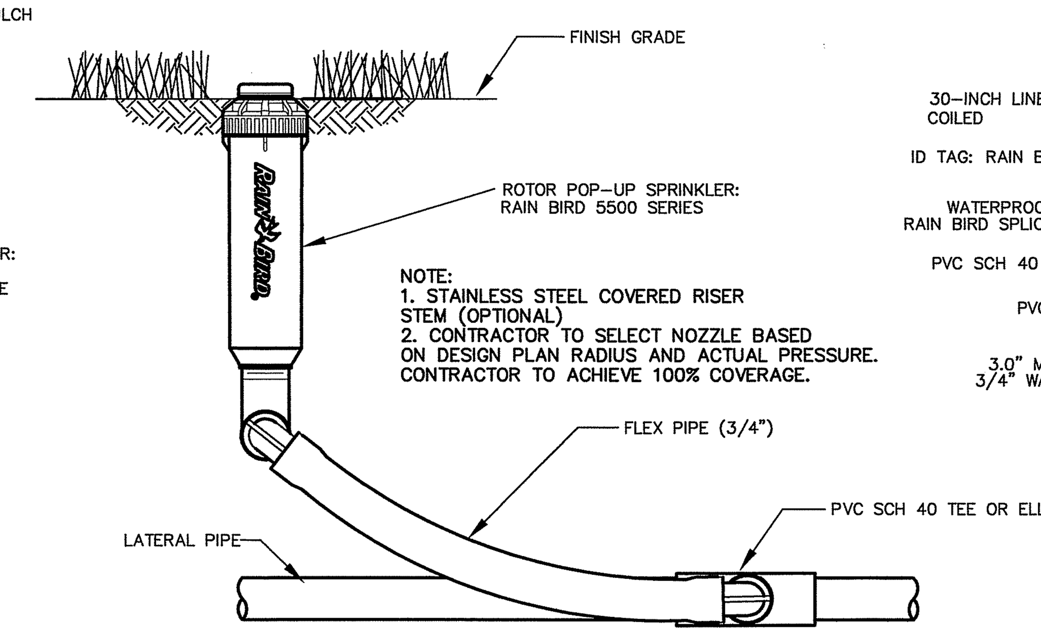

MODEL 5500 SERIES POP-UP ROTOR

GEAR DRIVE (5500 NOZZLE), FLEX PIPE, PRESSURE REGULATING

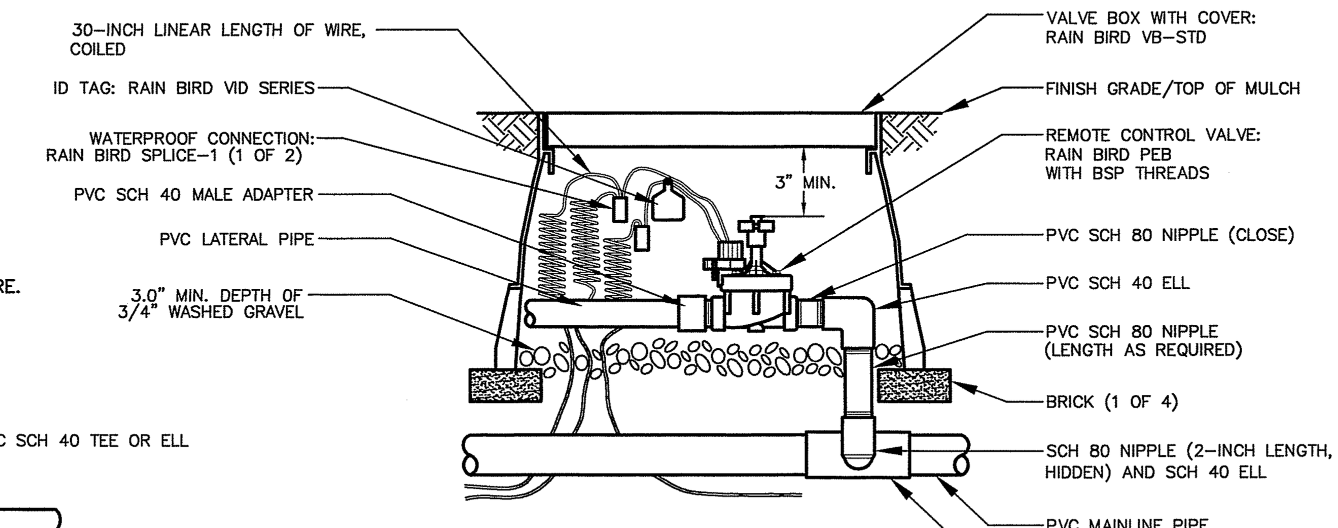

NOTES:
1. CALLOUTS FOR VALVE SHALL BE AS FOLLOWS:
FOR 1" VALVE SPEC 100-PEB/PESB
FOR 1½" VALVE SPEC 150-PEB/PESB
FOR 2" VALVE SPEC 200-PEB/PESB
2. PESB SERIES INCORPORATES SELF-CLEANING SCRUBBER & STAINLESS STEEL SCREEN.

VALVES: PEB OR PESB SERIES

PLASTIC VALVE, ELECTRIC (MODEL PEB SHOWN)

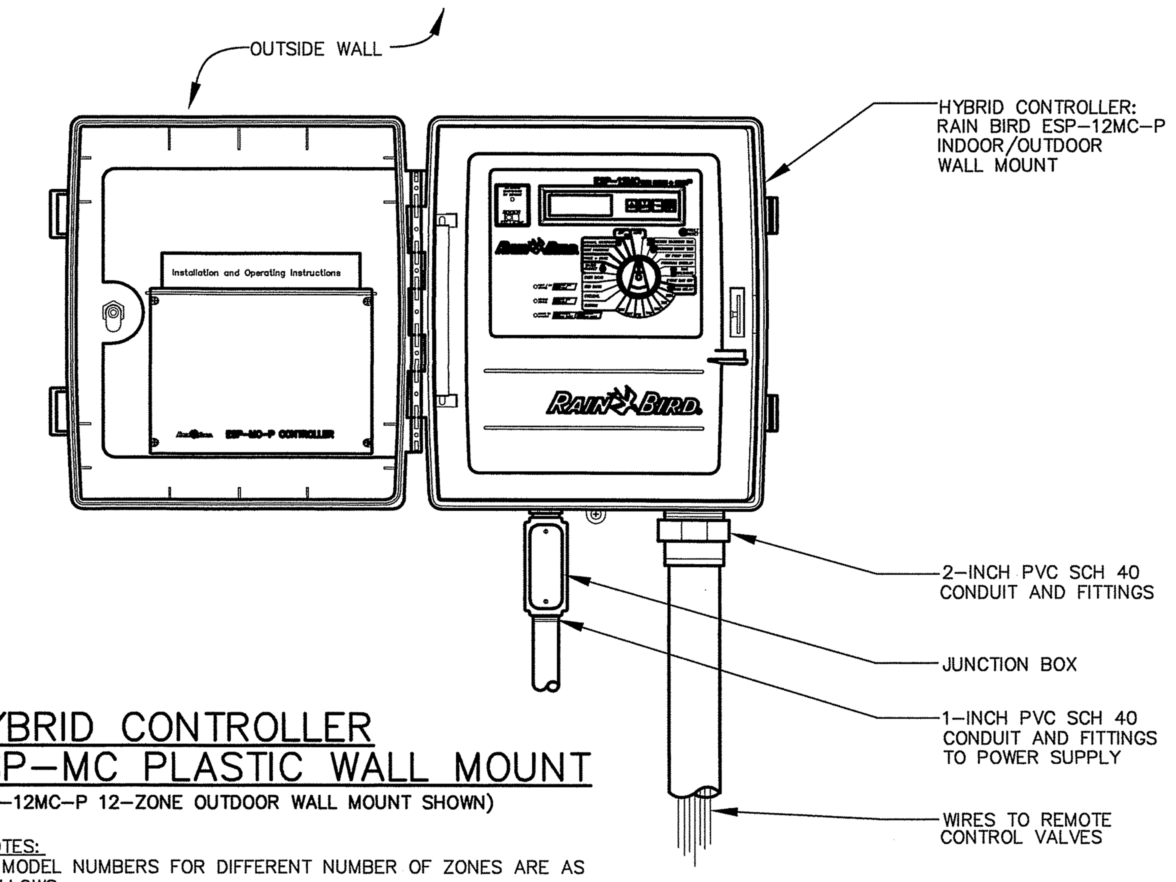

HYBRID CONTROLLER ESP-MC PLASTIC WALL MOUNT

(ESP-12MC-P 12-ZONE OUTDOOR WALL MOUNT SHOWN)

NOTES:
1. MODEL NUMBERS FOR DIFFERENT NUMBER OF ZONES ARE AS FOLLOWS:
ESP-8MC-P FOR 8-ZONE
ESP-16MC-P FOR 16-ZONE
ESP-24MC-P FOR 24-ZONE
ESP-32MC-P FOR 32-ZONE
ESP-40MC-P FOR 40-ZONE
2. FOR INDOOR WALL MOUNT, JUST CHANGE NOTATION ON DETAIL.
3. CONTRACTOR MAY SUBSTITUTE STEEL WALL MOUNT IN LIEU OF PLASTIC WALL MOUNT AT NO ADDITIONAL COST TO THE OWNER.

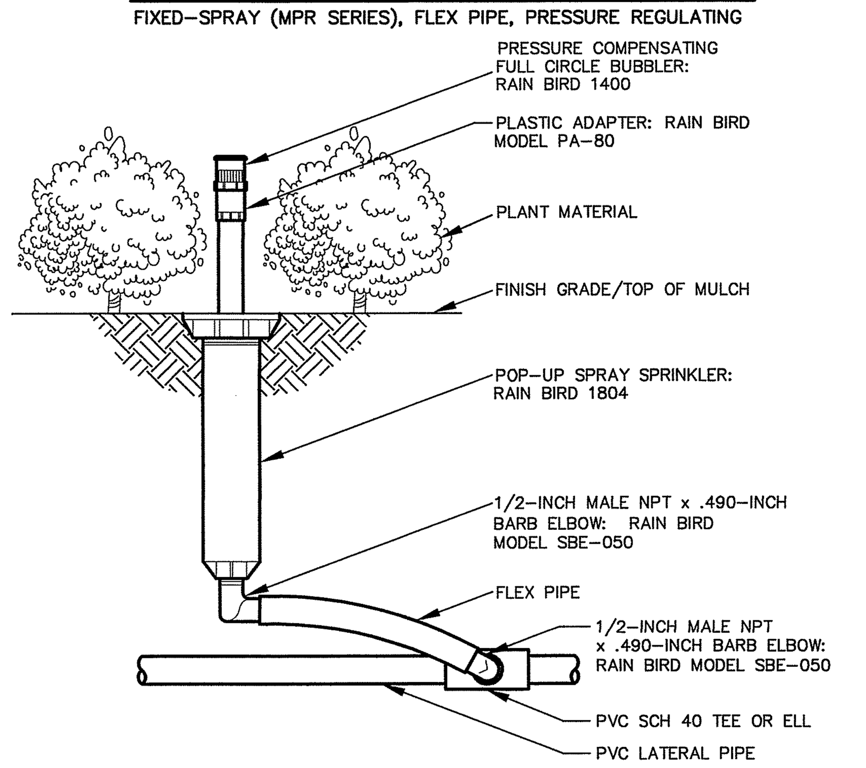

SPRINKLERS: PRESSURE COMPENSATING FULL-CIRCLE BUBBLER

RAIN BIRD N-1400 BUBBLER (MPR SERIES) ON 1804 POP-UP, FLEX PIPE

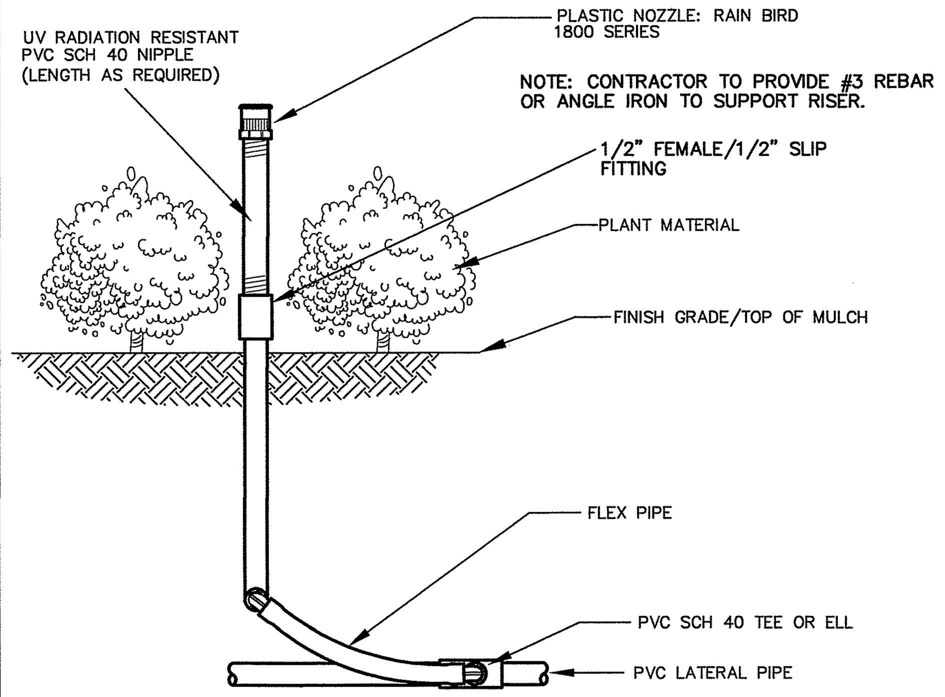

MODEL: 1800 NOZZLE ON RISER

FIXED SPRAY, FLEX PIPE

RAIN BIRD MPR SERIES NOZZLE SELECTION CHART

SYM	SPEC	P.S.I.	G.P.M.	RADIUS	PATTERN
A	15F	30	3.7	15'	FULL
B	15TQ	30	2.78	15'	THREE QUARTER
C	N/A	–	–	–	N/A
D	15H	30	1.85	15'	HALF
E	15T	30	1.23	15'	THIRD
F	15Q	30	0.92	15'	QUARTER
G	15EST	30	0.61	4'X15'	END STRIP
H	15CST	30	1.21	4'X30'	CENTER STRIP
J	15SST	30	1.21	4'X30'	SIDE STRIP
K	12F	30	2.6	12'	FULL
L	12TQ	30	1.95	12'	THREE QUARTER
M	N/A	–	–	–	N/A
N	12H	30	1.3	12'	HALF
O	5Q-B	30	0.50	5'	BUBBLER
P	12T	30	0.87	12'	THIRD
R	12Q	30	0.65	12'	QUARTER
S	10F	30	1.58	10'	FULL
T	10H	30	0.79	10'	HALF
V	10Q	30	0.39	10'	QUARTER
W	8F	30	1.05	8'	FULL
X	8H	30	0.52	8'	HALF
Y	8T	30	0.35	8'	THIRD
Z	8Q	30	0.26	8'	QUARTER
5F	5F	30	0.41	5'	FULL
5H	5H	30	0.20	5'	HALF
5T	5T	30	0.13	5'	THIRD
5Q	5Q	30	0.10	5'	QUARTER

5500 NOZZLE PERFORMANCE DATA CHART

NOZZLE NO.	PSI	GPM	RADIUS
2	40	1.6	37'
3	40	2.7	39'
4	40	2.9	41'
5	40	3.5	41'
6	40	4.8	45'
8	40	6.4	45'
10	40	7.5	41'
12	40	10.1	39'

5500 SHORT RADIUS NOZZLE PERFORMANCE DATA CHART

NOZZLE NO.	PSI	GPM	RADIUS
18S	40	1.5	19'
22S	40	1.6	21'
26S	40	1.9	25'
30S	40	1.8	29'

IRRIGATION LEGEND

- ● RAIN BIRD 1812-PRS SERIES – 12" POP-UP SPRAY HEAD, INSTALLED AS SHOWN, SEE NOZZLE CHART
- ○ RAIN BIRD 1806-PRS SERIES – 6" POP-UP SPRAY HEAD, INSTALLED AS SHOWN, SEE NOZZLE CHART
- ◉ RAIN BIRD MODEL 5500 SERIES SPRINKLER-GEAR DRIVE, FULLY ADJUSTABLE
- ⊗ RAIN BIRD PEB OR PESB SERIES – ELECTRIC CONTROL VALVE INSTALLED IN VB-STD VALVE BOX.
- ⧓ DENOTES PROPOSED VALVE (SIZE AS SHOWN)
- – – – – DENOTES PROPOSED IRRIGATION MAIN, SCH. 40 (SIZE AS SHOWN)
- ——— DENOTES PROPOSED IRRIGATION LATERAL SCH. 40 (SIZE AS SHOWN)
- ==== P.V.C. SLEEVE SIZE AS SHOWN
- • DENOTES PROPOSED RAIN SENSOR, RAIN BIRD RSD SERIES
- ▭ DENOTES PROPOSED RAIN BIRD ESP-MC SERIES CONTROLLER

VALVE KEY ID-BOX

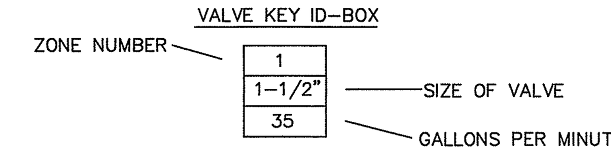

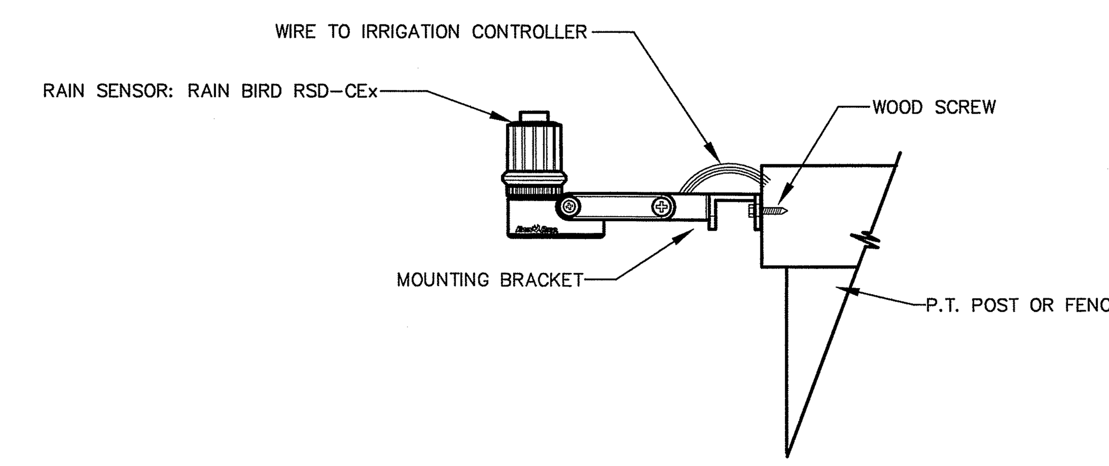

MODEL RSD-CEx POST/FENCE MOUNTING

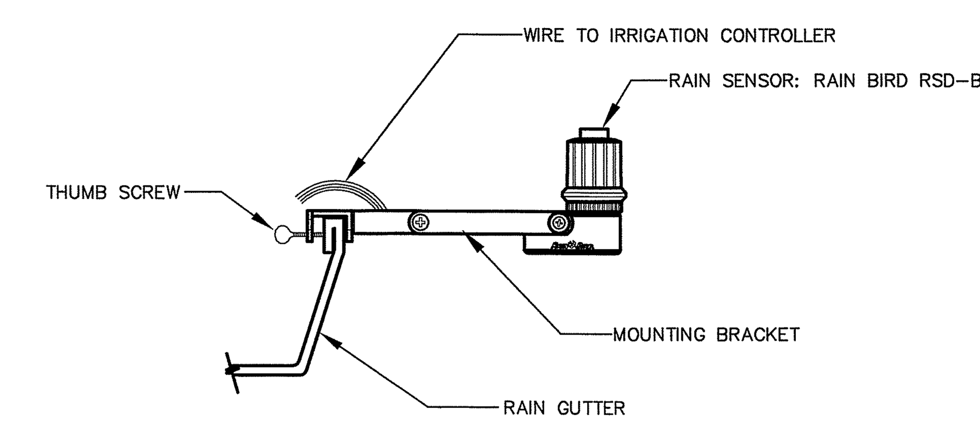

MODEL RSD-BEx GUTTER MOUNTING

RAIN SENSOR MOUNTING DETAILS

GENERAL IRRIGATION NOTES

1. THE CONTRACTOR SHALL REFER TO THE LANDSCAPING PLAN WHEN TRENCHING TO LAY PIPE TO AVOID NEW & EXISTING TREES & LARGE SHRUBS.
2. ALL WIRING FROM THE IRRIGATION CONTROLLER TO THE REMOTE CONTROL VALVES SHALL BE UF-14/1 DIRECT BURIAL CABLE. ALL WIRE SPLICES SHALL BE MADE IN VALVE BOXES USING ONLY RAIN BIRD CONNECTORS & SEALANT.
3. UNLESS OTHERWISE INDICATED, PIPING TO A SINGLE SPRAY HEAD SHALL BE ½" PVC PIPING. UNLESS OTHERWISE INDICATED, PIPING TO A SINGLE ROTOR HEAD SHALL BE ¾" PVC PIPING.
4. ALL MAIN LINE PIPING SHALL BE BURIED TO HAVE A MINIMUM COVER OF 18". ALL LATERAL PIPING DOWNSTREAM OF THE MAIN LINE SHALL BE BURIED TO HAVE A MINIMUM COVER OF 12".
5. THE CONTRACTOR SHALL COORDINATE WITH THE LANDSCAPE ARCHITECT ON THE EXACT LOCATION OF THE IRRIGATION CONTROLLERS.
6. THE CONTRACTOR SHALL VERIFY ALL CONDITIONS & DIMENSIONS SHOWN ON PLANS AT THE SITE PRIOR TO COMMENCEMENT OF WORK UNDER THIS CONTRACT.
7. ALL IRRIGATION INSTALLATION SHALL CONFORM TO LOCAL CODES & REGULATIONS.
8. ALL PIPING ON THE PLANS IS DIAGRAMMATICALLY ROUTED FOR CLARITY & SHALL BE ROUTED TO AVOID PLANTS. DESIGN MODIFICATIONS SHALL ONLY BE MADE AS NECESSARY TO MEET FIELD CONDITIONS & ONLY UPON APPROVAL OF THE LANDSCAPE ARCHITECT. PIPING SHOWN RUNNING PARALLEL UNDER SIDEWALKS ADJACENT TO PLANTED AREAS IS FOR DESIGN CONVENIENCE ONLY & SHALL BE INSTALLED WITHIN THE PLANTED AREA.
9. THE CONTRACTOR SHALL BE RESPONSIBLE FOR THE FINAL ADJUSTMENT OF THE SPRINKLERS ARC & RADIUS TO ASSURE 100 PERCENT COVERAGE.
10. 115 VOLT, SINGLE PHASE ELECTRICAL POWER FOR THE IRRIGATION CONTROLLERS SHALL BE COORDINATED BY THE IRRIGATION CONTRACTOR WITH THE ELECTRICAL ENGINEERING DRAWINGS. IRRIGATION CONTRACTOR SHALL BE RESPONSIBLE FOR THE ELECTRICAL HOOK-UP INCLUDING ELECTRICAL MATERIALS.
11. VALVES LOCATED OUTSIDE OF RIGHT-OF-WAY ARE FOR DESIGN PURPOSES ONLY & SHALL BE LOCATED INSIDE OF RIGHT-OF-WAY.
12. ANY CHANGES TO IRRIGATION ZONE PIPING TO BE APPROVED BY THE CITY LANDSCAPE ARCHITECT PRIOR TO WORK BEING DONE.
13. ALL XERIC IRRIGATION ZONES SHALL HAVE RUN TIMES REDUCED OR ELIMINATED AFTER SUFFICIENT PLANT ESTABLISHMENT. THIS NOTE TO APPEAR INSIDE THE CONTROLLER FOR MAINTENANCE PERSONNEL INFORMATION.

SPECIFIC IRRIGATION NOTES

1. IRRIGATION SPRAY HEADS SHALL BE PRESSURE REGULATING.
2. SYSTEM SUPPLY REQUIREMENTS ARE: 40 GPM @ 40 PSI AT WATER SOURCE. CONTRACTOR SHALL NOTIFY LANDSCAPE ARCHITECT IF DESIGN FLOW RATE AND PRESSURE DOES NOT EXIST.
3. LATERAL PIPES SHALL BE SIZED SUCH THAT THE WATER VELOCITY DOES NOT EXCEED 5 FEET/SECOND. CONTRACTOR SHALL APPLY THE FOLLOWING TABLE:

PIPE SIZE (MIN)	FLOW
1/2"	<6 GPM
3/4"	<10 GPM
1"	<15 GPM
1¼"	<26 GPM
1½"	<36 GPM
2"	<50 GPM
2½""	<80 GPM
3"	<120 GPM
4"	<200 GPM

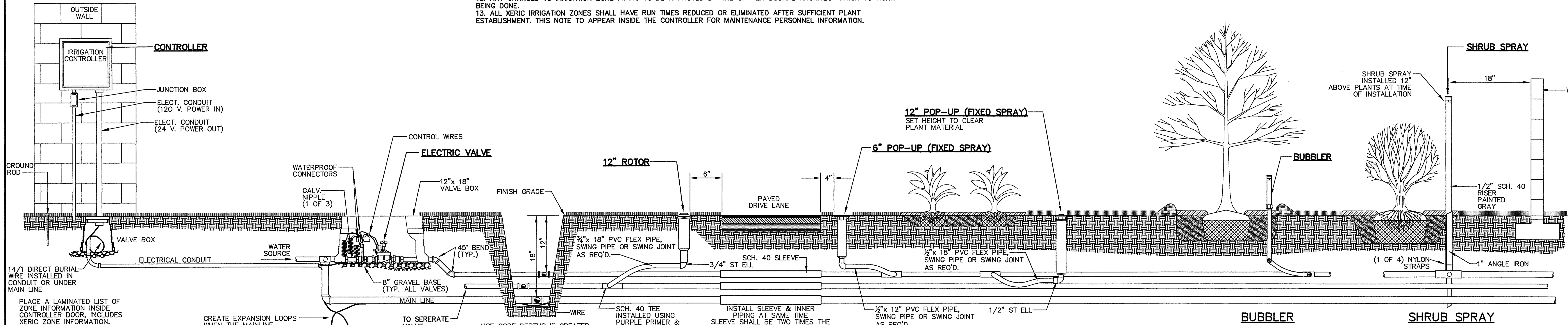

NOTE: REQUIREMENTS VARY; CHECK LOCAL CODES PRIOR TO INSTALLATION.

TYPICAL IRRIGATION DETAILS

NO.	DATE	DESCRIPTION	BY

REVISIONS

PARKER MYNCHENBERG & ASSOCIATES, INC.
PROFESSIONAL ENGINEERS * LANDSCAPE ARCHITECTS
1729 RIDGEWOOD AVENUE HOLLY HILL, FLORIDA 32117
(386)677-6891 FAX(386)677-2114 E-MAIL: info@parkermynchenberg.com
CERTIFICATE OF AUTHORIZATION NUMBER: 00003910

IRRIGATION DETAILS

ORMOND RENAISSANCE CONDOMINIUM
ORMOND BEACH * FLORIDA

FILE NO. 13-49LID.DWG	DESIGNER: P.MYNCHENBERG
DATE: 12.12.13	CADD TECH: C.HARNDEN
SCALE: NONE	SHEET 40 OF 48

SEAL

Bruce Work\Bruce Work\RENAISSANCE\RENAISSANCE\13-49LID.dwg, 2/13/2014 1:40:06 PM, HP Designjet T1100 44in HPGL2.pc3, Arch D (landscape), 1:1

CONTRACTOR REQUIREMENTS FOR SITE CLEARING, GRADING, AND EROSION CONTROL DESIGN AND CONSTRUCTION NOTES

1. NO DISTURBANCE OF PROPOSED CONSERVATION EASEMENTS, NATURAL BUFFERS, OR WATER BODIES IS PERMITTED. THE CONTRACTOR SHALL LOCATE THESE AREAS ON SITE AND BARRICADE THEM TO AVOID ANY UNAUTHORIZED CLEARING. BARRICADES AND OTHER PROTECTIVE FENCING ARE TO BE LOCATED AT THE DRIP LINE OF EXISTING NATIVE TREES OR AT THE EDGE OF THE NATIVE UNDER- STORY HABITAT, WHICHEVER IS NEAREST TO THE CONSTRUCTION ACTIVITY.
2. SPECIMEN AND HISTORIC TREES, CONSERVATION EASEMENTS, NATURAL VEGETATION BUFFERS, AND SIMILAR AREAS MUST BE PROTECTED BY BARRICADES OR FENCING PRIOR TO CLEARING. BARRICADES ARE TO BE SET AT THE DRIP LINE OF THE TREES AND MAINTAINED THROUGHOUT THE DURATION OF THE PROJECT. BARBED WIRE IS NOT PERMITTED AS A PROTECTIVE BARRIER.
3. WHERE A CHANGE OF GRADE OCCURS AT THE DRIP LINE OF A SPECIMEN TREE, SILT FENCES WILL BE REQUIRED DURING CONSTRUCTION AND RETAINING WALLS MUST BE INSTALLED PRIOR TO FINAL ACCEPTANCE BY THE CITY.
4. IT SHALL BE THE RESPONSIBILITY OF THE CONTRACTOR TO HAVE ALL PROTECTIVE VEGETATION BARRICADES AND EROSION CONTROL STRUCTURES AND MEASURES IN PLACE PRIOR TO THE COMMENCEMENT OF ANY EARTHWORK, INCLUDING PRELIMINARY GRUBBING. THESE MEASURES INCLUDE, BUT ARE NOT LIMITED TO, TEMPORARY CONSTRUCTION FENCES, SYNTHETIC JUTE BALES, WATTLES, &/OR HAVE BEST MANAGEMENT PRACTICES (BMP'S) AS REQUIRED, SILT FENCES, AND FLOATING TURBIDITY BARRIERS. FURTHER, IT SHALL BE THE RESPONSIBILITY OF THE CONTRACTOR TO MAINTAIN ALL EROSION CONTROL DEVICES THROUGHOUT THE DURATION OF THE ENTIRE PROJECT. MAINTENANCE SHALL INCLUDE PERIODIC INSPECTION AND REMOVAL OF DEBRIS ABUTTING EROSION CONTROL DEVICES.
5. PRIOR TO THE INSTALLATION OF ANY FILL MATERIALS ON SUBJECT SITE, SILT FENCES SHALL BE INSTALLED (1) ALONG SUBJECT SITE BOUNDARY AND PROPERTY LINES, (2) AT THE EDGE OF CONSERVATION EASEMENTS AND WETLANDS, (3) ADJACENT TO NATURAL LANDSCAPE BUFFERS, (4) AROUND THE PERIMETER OF EXISTING STORM WATER TREATMENT FACILITIES, AND (5) AT ANY ADDITIONAL AREAS THAT THE CITY DEEMS NECESSARY TO BE PROTECTED FROM POTENTIAL EROSION IMPACTS DURING CONSTRUCTION. THESE CONDITIONS SHALL APPLY IN ALL INSTANCES WHERE FILL MATERIAL IS BEING INSTALLED WITHIN 25 FEET OF ANY OF THE AFOREMENTIONED LOCATIONS. WHILE THESE ITEMS REPRESENT THE MINIMUM REQUIREMENTS, THE CITY RESERVES THE RIGHT TO IMPOSE ADDITIONAL PROTECTIVE MEASURES, AS DETERMINED DURING ACTUAL SITE VISITS CONDUCTED AS PART OF THE STANDARD REVIEW OF THE SITE THROUGHOUT PROJECT CONSTRUCTION.
6. AT A MINIMUM, THE CONTRACTOR SHALL SEED AND MULCH ALL DISTURBED AREAS. SUFFICIENT GRASS COVERAGE IS TO BE ESTABLISHED WITHIN TWO WEEKS.
7. IT SHALL BE THE RESPONSIBILITY OF THE CONTRACTOR THROUGH SCHEDULING, TO MINIMIZE THE DISTURBANCE OF SITE AREAS THAT HAVE BEEN BROUGHT TO THEIR PROPOSED FINAL GRADE. WITHIN SEVEN (7) DAYS OF BRINGING A SUBJECT AREA TO ITS FINAL GRADE OR INACTIVITY IN CONSTRUCTION, THE CONTRACTOR SHALL INSTALL SEED AND MULCH OR SOD, AS REQUIRED. ANY PROJECT THAT IS INACTIVE FOR A PERIOD OF 30 DAYS OR MORE SHALL BE STABILIZED TO THE SATISFACTION OF THE CITY OF ORMOND BEACH
8. ONCE AN AREA IS SEEDED OR SODDED, IT MUST BE MAINTAINED BY THE CONTRACTOR TO ALLOW THE GRASS TO BECOME ESTABLISHED. IF THE GRASS IS NOT ESTABLISHED WITHIN TWO WEEKS THE CITY MAY REQUIRE THE CONTRACTOR TO RE-SEED OR A NON-VEGETATIVE OPTION MAY BE EMPLOYED.

A. 9. ABSOLUTELY NO BURYING OF CLEARED MATERIALS IS PERMITTED.

10. THE REMOVAL OF ALL VEGETATION AND TOPSOIL ON THE FUTURE ROADWAY, PARKING AND BUILDING LOT AREAS IS REQUIRED TO BE COMPLETED PRIOR TO THE PLACEMENT OF FILL ON THOSE AREAS. THE TOPSOIL MAY BE TEMPORARILY STOCKPILED AND USED AS TOPSOIL OVER OVER PROPOSED GREEN AREAS SUCH AS PLANT BEDS, SODDED AREAS, AND WHERE TREES ARE TO BE INSTALLED OR RELOCATED.
11. A SIGNED, DATED, AND SEALED LETTER FROM A SOILS ENGINEER OR THE ENGINEER OF RECORD CERTIFYING THAT THE AREAS TO BE FILLED HAVE BEEN STRIPPED OF ORGANIC MATERIALS, MUST BE SUBMITTED TO THE CITY PRIOR TO FILLING.
10. FILL MATERIAL IS TO BE PLACED IN ONE FOOT LIFTS AND COMPACTED TO THE APPROPRIATE DENSITY (98% FOR PAVED AREAS AND 95% FOR BUILDING PADS AND ALL OTHER AREAS AS PER AASHTO T-180).
11. DURING SUBDIVISION DEVELOPMENT WHEN FUTURE BUILDING LOTS ARE FILLED AS PART OF THE OVERALL SUBDIVISION IMPROVEMENTS, COMPACTION TEST REPORTS MUST BE PERFORMED ON THE BUILDING LOTS AT 300 FOOT INTERVALS. THESE TESTS ARE TO BE PERFORMED IN ONE-FOOT VERTICAL INCREMENTS. THE RESULTS OF THESE TESTS ARE TO BE SUBMITTED TO THE CITY UPON COMPLETION OF THE TESTS.
12. IF ANY MUCK MATERIAL IS DISCOVERED, IT SHALL BE REQUIRED TO BE REMOVED AND REPLACED WITH A SUITABLE MATERIAL THAT IS PROPERLY BACKFILLED, COMPACTED AND TESTED USING AASHTO T-180 MODIFIED PROCTOR METHOD.
13. STOCKPILING IS NOT GENERALLY PERMITTED BY THE CITY. WHEN ALLOWED, STOCKPILES SHALL NOT EXCEED SIX FEET IN HEIGHT MEASURED FROM THE ORIGINAL GRADE. AT A MINIMUM, STOCK PILES THAT WILL REMAIN IN PLACE IN EXCESS OF TWENTY DAYS SHOULD BE SEEDED AND MULCHED IMMEDIATELY UPON PLACEMENT OF THE FINAL LIFT.
14. SOILS ARE TO BE STABILIZED BY WATER OR OTHER MEANS DURING CONSTRUCTION. THIS IS INTENDED TO REDUCE SOIL EROSION AND THE IMPACT TO NEIGHBORING COMMUNITIES. ADEQUATE WATERING METHODS SHOULD BE EMPLOYED TO ALLOW DAILY COVERAGE OF THE ENTIRE LIMITS OF ALL AREAS THAT DO NOT HAVE AN ESTABLISHED VEGETATIVE COVER. METHODS TO BE EMPLOYED INCLUDE, BUT ARE NOT LIMITED TO, WATER TRUCKS, PERMANENT IRRIGATION SYSTEMS, TEMPORARY SPRINKLER SYSTEMS OPERATED BY PUMPING UNITS CONNECTED TO WET RETENTION PONDS, WATER CANNONS, TEMPORARY IRRIGATION SYSTEMS MOUNTED ATOP STOCKPILE AREAS, AND OTHER METHODS AS DEEMED NECESSARY BY THE CITY.
15. ALL FILL MATERIALS LOCATED BENEATH STRUCTURES AND PAVEMENT SHALL CONSIST OF CLEAN GRANULAR SAND FREE FROM ORGANICS AND SIMILAR MATERIAL THAT COULD DECOMPOSE.
16. ALL FILL TO BE PLACED IN LANDSCAPED AREAS SHALL HAVE A Ph RANGE BETWEEN 5.5 AND 7.5, BE ORGANIC IN NATURE, FREE OF ROCKS AND DEBRIS, OR MATCH NATIVE EXISTING SOILS.
17. OWNER SHALL FILE A "NOTICE OF INTENT TO USE GENERIC PERMIT FOR STORMWATER DISCHARGE FROM LARGE AND SMALL CONSTRUCTION ACTIVITIES" WITH THE FLORIDA DEPARTMENT OF ENVIRONMENTAL PROTECTION AS REQUIRED BY FDEP. CONTRACTOR SHALL BE REQUIRED TO COMPLY WITH ALL PROVISIONS OF THE GENERIC PERMIT INCLUDING BUT NOT LIMITED TO:
    - A. PROVIDE SUCH EROSION AND SEDIMENT CONTROL MEASURES AS MAY BE NECESSARY TO PREVENT DISCHARGE OF POLLUTANTS FROM THE SITE FROM THE START OF CONSTRUCTION UNTIL THE FINAL GROUND COVER HAS BEEN ESTABLISHED.
    - B. EMPLOY A DEP CERTIFIED INSPECTOR TO MAKE WEEKLY INSPECTIONS / REPORTS OF THE CONDITION OF EROSION AND SEDIMENT CONTROL MEASURES.
    - C. EMPLOY A DEP CERTIFIED INSPECTOR TO MAKE INSPECTIONS / REPORTS OF THE CONDITION OF EROSION AND SEDIMENT CONTROL MEASURES WITHIN 24 HOURS OF EVERY RAINFALL EVENT EXCEEDING ONE-HALF INCH.
    - D. MAINTAIN ALL EROSION AND SEDIMENT CONTROL MEASURES THROUGHOUT CONSTRUCTION.
    - E. ADD EROSION AND SEDIMENT CONTROL MEASURES AS SITE CONDITIONS CHANGE.

THE FOLLOWING MEASURES REPRESENT MINIMUM STANDARDS TO BE ADHERED TO BY THE CONTRACTOR THROUGHOUT THE CONSTRUCTION OF A PROJECT. THE CITY RESERVES THE RIGHT TO REQUIRE ADDITIONAL MEASURES TO BE EMPLOYED WHEN WARRANTED BY EXTREME CONDITIONS AND/OR THE FAILURE OF THE CONTRACTOR TO EMPLOY THE APPROPRIATE EROSION CONTROL BEST MANAGEMENT PRACTICES. FAILURE TO COMPLY WITH THESE PROVISIONS SHALL RESULT IN THE ISSUANCE OF A "STOP WORK ORDER".

ROADWAY CONSTRUCTION NOTES

1. ALL RIGHT OF WAY OTHER THAN ROADWAY AREAS SHALL BE SEEDED AND MULCHED OR SODDED. ALL SLOPES GREATER THAN 6% SHALL BE SODDED. THE CITY RESERVES THE RIGHT TO REQUIRE SODDING IN SPECIAL AREAS WHERE EROSION IS A CONCERN.
2. THE FOLLOWING WILL BE THE STANDARD PROTECTION FOR DITCHES UNLESS DRAINAGE CALCULATIONS INDICATE OTHERWISE:

SWALE PROFILE GRADES	PROTECTION REQUIRED
0.2% – 1.0%	SEEDING AND MULCHING
1.0% – 4.0%	SODDING
4.0% AND GREATER	DITCH PAVING

3. ALL FRANCHISE UTILITY CROSSINGS, INCLUDING BUT NOT LIMITED TO FPL, BELLSOUTH AND CABLE SHALL BE INSTALLED PRIOR TO INSTALLATION AND COMPACTION OF THE ROAD SUB BASE. ANY CROSSINGS AFTER INSTALLATION OF THE SUB BASE SHALL BE BY DIRECTIONAL BORE.
4. THE LIMITS OF STABILIZED SUB BASE SHALL EXTEND TO A DEPTH OF SIX INCHES (6") BELOW THE BOTTOM OF THE BASE AND OUTWARD TO TWELVE INCHES (12") BEYOND THE CURB. •
5. THE STABILIZING MATERIAL, IF REQUIRED, SHOULD BE A HIGH BEARING VALUE SOIL, SAND-CLAY, LIMEROCK, RECYCLED CONCRETE, SHELL OR OTHER MATERIAL AS APPROVED BY THE CITY AND A LICENSED SOILS ENGINEER.
6. THE SUB BASE SHALL BE STABILIZED NOT LESS THAN FORTY (40) POUNDS LIMEROCK BEARING RATIO (LBR). A COMPACTION OF NO LESS THAN NINETY-EIGHT (98%) PERCENT DENSITY BASED ON AASHTO T-180 SHALL BE REQUIRED.
7. TESTS FOR SUB BASE BEARING CAPACITY AND COMPACTION SHALL BE DONE AT A MINIMUM OF EVERY 300 FEET AND SHALL BE STAGGERED TO THE LEFT, RIGHT AND AT CENTER LINE OF THE ROADWAY.
8. BASES FOR ALL STREETS SHALL HAVE A MINIMUM SIX INCH (6") DEPTH. PRIMING AND SANDING SHALL BE REQUIRED AS SOON AS BEARING CAPACITY AND COMPACTION HAS BEEN ACHIEVED.
9. MAXIMUM DENSITY BASED ON AASHTO T-180 MODIFIED PROCTOR TEST. RECYCLED CONCRETE OR LIMEROCK BASES SHALL BE COMPACTED TO (98%)
10. MATERIAL DELIVERY TICKETS SHALL BE PROVIDED TO THE CITY AT THE TIME OF PLACEMENT.

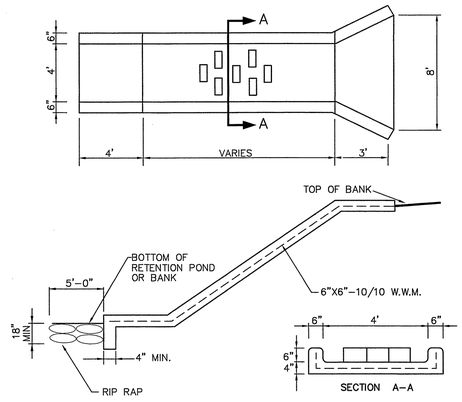

1. CONCRETE SPILLWAY TO BE 28 DAY, 2500 P.S.I., 4" THICK.
2. PLACE SOD AT LEAST 5' AROUND ALL STRUCTURE EDGES ABOVE STANDING WATER.
3. ALL EXPOSED CORNERS TO BE ROUNDED @ 3/4" MINIMUM RADIUS.

CONCRETE SPILLWAY
NTS.

ROADWAY CONSTRUCTION NOTES (CONTINUED)

11. TESTING OF THE IN-PLACE BASE SHALL BE DONE AT INTERVALS EQUIVALENT TO SUB BASE TESTING AND SHALL CONSIST OF, AS A MINIMUM, MOISTURE CONTENT AND COMPACTION TEST.
12. DESIGN MIXES SHALL BE SUBMITTED TO THE CITY FOR THEIR APPROVAL NO LESS THAN THREE (3) WORKING DAYS PRIOR TO ANY ROADWAY CONSTRUCTION.
13. ASPHALT SPECIFICATIONS SHALL BE SUBMITTED BY THE DESIGN ENGINEER WITH FINAL PLANS TO THE CITY. FLORIDA STATE CERTIFIED BATCH PLANTS MUST THEN CERTIFY THAT THESE APPROVED SPECIFICATIONS HAVE BEEN MET.
14. EXTRACTION AND GRADATION TESTS ON ASPHALT MIXES SHALL BE PROVIDED TO THE CITY TO INSURE THAT DESIGN MIXES MEET THE CITY STANDARD SPECIFICATIONS.
15. THE ROADWAY CROWN SHALL HAVE A STANDARD ONE QUARTER INCH (1/4") PER FOOT SLOPE.
16. ALL ROADWAYS WITH CURB AND GUTTER SECTIONS SHALL HAVE AS A STANDARD A MINIMUM LONGITUDINAL SLOPE OF 0.30%.
17. THE FINISHED PAVEMENT EDGE SHALL BE WITHIN ONE QUARTER INCH (1/4") OF THE ADJACENT CONCRETE CURB.
18. CONCRETE CURBS SHALL BE PROVIDED ON BOTH SIDES OF ALL STREETS AND CONSTRUCTED WITH 2500 PSI CONCRETE AT 28 DAYS.
19. CONCRETE CURBS SHALL BE SAW CUT TO A DEPTH EQUAL TO 1/4 OF CURB THICKNESS AT INTERVALS OF TEN FEET (10') WITH EXPANSION JOINTS AT STREET INTERSECTIONS, STRUCTURES AND ALONG CURVES AT SIXTY FEET (60') INTERVALS. ALL EXPANSION JOINT MATERIAL IS REQUIRED TO BE INSTALLED THROUGH THE ENTIRE DEPTH OF THE CONCRETE CURB.
20. AN "X" SHALL BE CUT IN THE CURB TO MARK THE LOCATION OF WATER DISTRIBUTION SYSTEM VALVE.
21. AN "⊥" SHALL BE CUT INTO THE CURB TO MARK THE LOCATION OF ALL VALVES OTHER THAN WATER DISTRIBUTION VALVES.
22. A "V" SHALL BE CUT IN THE CURB TO MARK THE LOCATION OF ALL SEWER SERVICES.
23. A "L" SHALL BE CUT IN THE CURB TO MARK THE LOCATION OF ALL RECLAIMED WATER SERVICES.
24. A "Λ" SHALL BE CUT IN THE CURB TO MARK THE LOCATION OF ALL WATER SERVICES.
25. THREE (3) CONCRETE CYLINDERS SHALL BE TAKEN AND TESTED FOR EVERY THREE HUNDRED (300) FEET OF ROADWAY CONSTRUCTED. TEST RESULTS SHALL THEN BE PROVIDED TO THE CITY AS THEY BECOME AVAILABLE.
26. THE DEVELOPER SHALL PROVIDE ALL REQUIRED PAVEMENT MARKINGS ON ALL ROADWAYS PER CITY, COUNTY AND STATE REQUIREMENTS. CENTERLINE STRIPES SHALL BE PROVIDED ON EXTENSIONS OF CITY COLLECTOR OR ARTERIAL ROADS, COUNTY ROADS AND STATE HIGHWAYS ONLY.
27. STOP BARS SHALL BE PLACED AT ALL SUBDIVISION ENTRANCES AND INTERSECTIONS CONTAINING CITY COLLECTOR AND ARTERIAL ROADS, COUNTY ROADS AND STATE HIGHWAYS.
28. ALL TRAFFIC CONTROL DEVICES PLACED AT INTERSECTIONS, PRIVATE STREETS, PUBLIC STREETS, COUNTY ROADS AND STATE HIGHWAYS WITHIN THE CITY LIMITS SHALL BE INSTALLED ACCORDING TO THE MANUAL ON UNIFORM TRAFFIC CONTROL DEVICES, LATEST EDITION.
29. THE DEVELOPER IS RESPONSIBLE FOR PAYING FEES FOR ALL STREET LIGHTS PRIOR TO ACCEPTANCE OF THE PROJECT BY THE CITY.
30. STANDARD TURNING RADII FOR INTERSECTIONS:

2-LANE ACCESS OR FEEDER	35'
LOCAL TO COLLECTOR	35'
LOCAL OR COLLECTOR TO ARTERIAL	40'
ARTERIAL TO ARTERIAL	50'

31. CITY INSPECTOR SHALL BE PRESENT DURING PAVING OF ALL PUBLIC AND PRIVATE ROADS. PAVING SHALL BE PERFORMED DURING NORMAL BUSINESS HOURS, MONDAY THROUGH FRIDAY. PAVING DURING WEEKENDS IS NOT PERMITTED.
32. CONSTRUCTION METHODS AND DESIGN FOR CONCRETE PAVEMENT SHALL CONFORM TO FDOT STANDARD SPECIFICATION FOR ROAD AND BRIDGE CONSTRUCTION, LATEST EDITION.
33. ALL CONTRACTORS THAT ARE PERFORMING THE CONSTRUCTION OF PUBLIC IMPROVEMENTS (WATER MAIN, SANITARY SEWER MAIN, RECLAIMED WATER MAIN, STORM WATER PIPES AND INLETS AND ALSO CONSTRUCTION OF ROADWAYS) SHALL BE CERTIFIED WITH THE FLORIDA STATE DEPARTMENT OF PROFESSIONAL REGULATIONS (DPR) FOR THE TYPE OF WORK THAT THEY PERFORM. A COPY OF THE VALID LICENSE IS REQUIRED AT PRE CONSTRUCTION MEETING.
34. UTILITY DEPTH:
    - HIGH VOLTAGE UTILITIES SUCH AS POWER (FEEDER, SERVICE AND DROPS) SHALL BE BURIED A MINIMUM OF 30 INCHES IN DEPTH.
    - LOW VOLTAGE UTILITIES SUCH AS PHONE AND CABLE TV SHALL BE BURIED A MINIMUM OF 12 INCHES IN DEPTH FOR FEEDER AND SERVICES. SERVICE DROPS SHALL BE BURIED A MINIMUM OF 6 INCHES IN DEPTH.
    - HIGH VOLTAGE UTILITIES INSTALLED PARALLEL TO PRESSURE MAINS SHALL MAINTAIN A MINIMUM FIVE FOOT SEPARATION.
35. GEOTECHNICAL TESTING REPORTS SIGNED AND SEALED BY A PROFESSIONAL ENGINEER SHALL BE SUBMITTED TO THE CITY OF ORMOND BEACH PRIOR TO FINAL SIGN OFF. REPORTS SHALL CLEARLY LABEL PROJECT NAME AND PHASE.

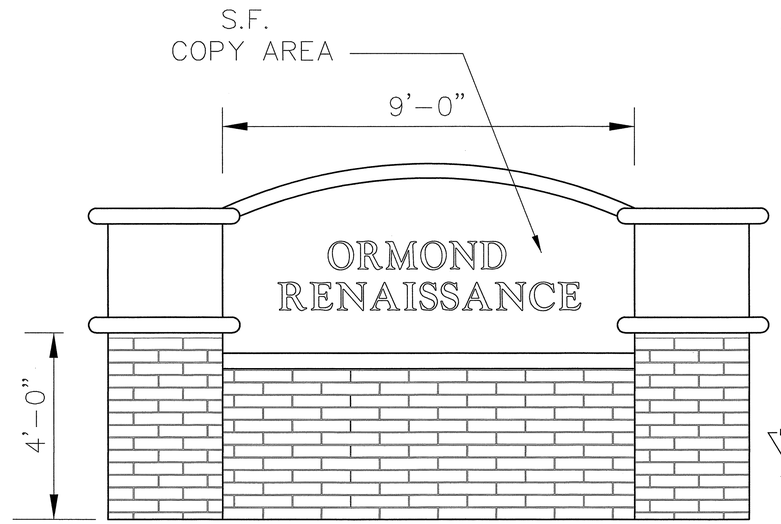

SIGN ELEVATION

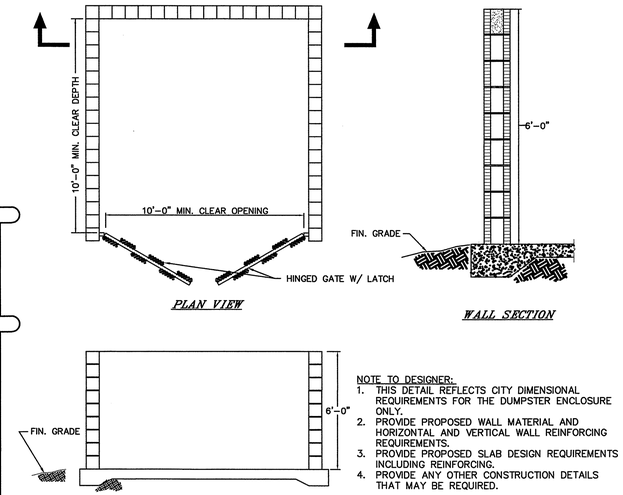

NOTE TO DESIGNER:
1. THIS DETAIL REFLECTS CITY DIMENSIONAL REQUIREMENTS FOR THE DUMPSTER ENCLOSURE ONLY.
2. PROVIDE PROPOSED WALL MATERIAL AND HORIZONTAL AND VERTICAL WALL REINFORCING REQUIREMENTS.
3. PROVIDE PROPOSED SLAB DESIGN REQUIREMENTS INCLUDING REINFORCING.
4. PROVIDE ANY OTHER CONSTRUCTION DETAILS THAT MAY BE REQUIRED.

NOTES:
1) BLOCK MUST BE FINISHED WITH STUCCO OR BRICK VENEER PAINTED TO MATCH BUILDING.
2) DUMPSTER STRUCTURE SHALL MEET THE REQUIREMENTS OF CHAPTER 2, ARTICLE 3, 2-50, J OF THE LAND DEVELOPMENT CODE (LDC).
3) SHRUB PLANTINGS REQUIRED (MIN. 3-FOOT WIDE PLANTING AREA) AROUND PERIMETER WALLS (EXCEPT OPENING).
4) GATES TO BE CONSTRUCTED OF PRESSURE-TREATED WOOD, OR APPROVED EQUAL.
5) THE CITY HAS A CONTRACTOR FOR ROLL OFF SERVICE. NO OTHER CONTRACTOR SHALL BE PERMITTED TO PROVIDE THIS SERVICE. VERIFY COMPANY UNDER CONTRACT WITH THE CITY.
6) DUMPSTER ENCLOSURE HEIGHT MAY BE INCREASED TO A MAXIMUM HEIGHT OF EIGHT (8) FEET.

SINGLE USE DUMPSTER ENCLOSURE
NTS

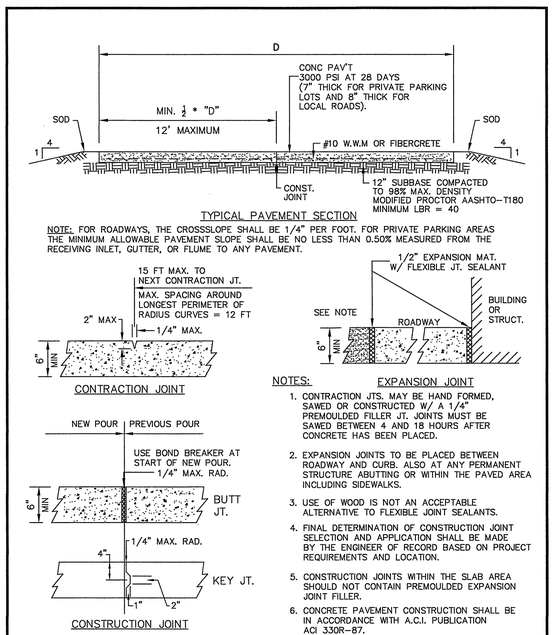

NOTE: FOR ROADWAYS, THE CROSSSLOPE SHALL BE 1/4" PER FOOT. FOR PRIVATE PARKING AREAS THE MINIMUM ALLOWABLE PAVEMENT SLOPE SHALL BE NO LESS THAN 0.50% MEASURED FROM THE RECEIVING INLET, GUTTER, OR FLUME TO ANY PAVEMENT.

NOTES:
1. CONTRACTION JTS. MAY BE HAND FORMED, SAWED OR CONSTRUCTED W/ A 1/4" PREMOULDED FILLER JT. JOINTS MUST BE SAWED BETWEEN 4 AND 18 HOURS AFTER CONCRETE HAS BEEN PLACED.
2. EXPANSION JOINTS TO BE PLACED BETWEEN ROADWAY AND CURB. ALSO AT ANY PERMANENT STRUCTURE ABUTTING OR WITHIN THE PAVED AREA INCLUDING SIDEWALKS.
3. USE OF WOOD IS NOT AN ACCEPTABLE ALTERNATIVE TO FLEXIBLE JOINT SEALANTS.
4. FINAL DETERMINATION OF CONSTRUCTION JOINT SELECTION AND APPLICATION SHALL BE MADE BY THE ENGINEER OF RECORD BASED ON PROJECT REQUIREMENTS AND LOCATION.
5. CONSTRUCTION JOINTS WITHIN THE SLAB AREA SHOULD NOT CONTAIN PREMOULDED EXPANSION JOINT FILLER.
6. CONCRETE PAVEMENT CONSTRUCTION SHALL BE IN ACCORDANCE WITH A.C.I. PUBLICATION ACI 330R-87.

EXPANSION JOINT

CITY OF ORMOND BEACH FLORIDA

STANDARD CONSTRUCTION DETAIL
CONCRETE PAVEMENT DETAILS
NTS

INDEX
R-11A
JAN 2012

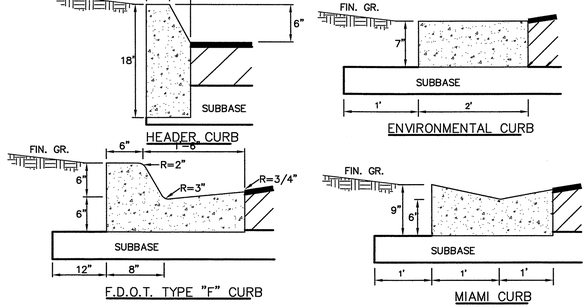

NOTES:
1. ALL CURBS TO BE CONSTRUCTED OF 28 DAY, 2500 P.S.I. CONCRETE
2. 1/2" PRE-MOLDED EXPANSION JOINT REQUIRED EVERY 500', CONSTRUCTION JOINT REQUIRED EVERY 10' MAXIMUM (4' MINIMUM).
3. 1/2" PRE-MOLDED EXPANSION JOINT REQUIRED AT EACH SIDE OF ALL STORM INLET STRUCTURES AND AT ALL RADIUS POINTS.
4. 6" SUBBASE TO BE COMPACTED AND TESTED TO 98% DENSITY WITH MINIMUM L.B.R. 40 BASED ON AASHTO T-180 MODIFIED PROCTOR TEST.
5. EXPANSION JOINT MATERIAL MUST COVER THE ENTIRE CROSS SECTION OF CURB.
6. ALL EXPOSED CORNERS TO BE ROUNDED AT 3/4" MIN. RADIUS.
7. ALL CURB ENDS THAT DO NOT TIE INTO OTHER FACILITIES SHALL TRANSITION DOWN TO PAVEMENT GRADE IN 24 INCHES.

STANDARD CURB CONSTRUCTION
NTS

NO.	DATE	DESCRIPTION	BY
		REVISIONS	

PARKER MYNCHENBERG & ASSOCIATES, INC.
PROFESSIONAL ENGINEERS * LANDSCAPE ARCHITECTS
1729 RIDGEWOOD AVENUE HOLLY HILL, FLORIDA 32117
(386)677-6891 FAX(386)677-2114 E-MAIL: info@parkermynchenberg.com
CERTIFICATE OF AUTHORIZATION NUMBER: 00003910

PAVING & DRAINAGE DETAILS

ORMOND RENAISSANCE CONDOMINIUM
ORMOND BEACH * FLORIDA

FILE NO. 13-49PD.DWG	DESIGNER: P.MYNCHENBERG	
DATE: 12.12.13	CADD TECH: C.HARNDEN	
SCALE: NONE	SHEET 41 OF 48	SEAL

X:\Bruce Work\Bruce Work\RENAISSANCE\RENAISSANCE\F-49PD.dwg, 2/26/2014 3:54:46 PM, HP Designjet T1100 44in HPGL2.pc3, Arch E (Landscape), 1:1

REQUIREMENTS FOR "AS-BUILT" DRAWINGS

JAN. 2012

IN ORDER TO ENSURE THAT NEW DEVELOPMENTS WITHIN THE CITY ARE CONSTRUCTED SUBSTANTIALLY IN ACCORDANCE WITH CITY REGULATIONS AND THE APPROVED DRAWINGS "AS-BUILT" DRAWINGS ARE REQUIRED:

THE FOLLOWING INFORMATION IS REQUIRED ON ALL PAVING AND DRAINAGE "AS-BUILT" DRAWINGS:

1. PAVEMENT AND CURB WIDTHS SHALL BE VERIFIED AND DIMENSIONED FOR EACH STREET AT EACH BLOCK. ALL RADII AT INTERSECTIONS SHALL BE VERIFIED AND DIMENSIONED. THIS INFORMATION TO CLEARLY INDICATE IT AS AS BEING "AS-BUILT" INFORMATION.
2. ROADWAY ELEVATIONS SHALL BE RECORDED AT ALL GRADE CHANGES OR OTHER INTERVALS AS NEEDED ALONG ALL STREETS. STREET CENTERLINE AND CURB INVERT ELEVATIONS SHALL BE RECORDED AS NOTED. THE "AS-BUILT" CENTERLINE PROFILE OF ALL STREETS SHALL ALSO BE SHOWN ON THE PLAN AND PROFILE SO IT MAY BE COMPARED TO THE EXISTING AND DESIGNED PROFILE GRADE LINES. ALL STREET CENTERLINES ON "AS-BUILTS" SHALL BE LABELED WITH STREET NAME AND RIGHT-OF-WAY WIDTH ON EVERY PAGE.
3. STORM DRAINAGE STRUCTURES SHALL BE LOCATED AND/OR DIMENSIONED FROM CENTERLINES OR LOT LINES AS APPROPRIATE.
4. STORM DRAINAGE PIPE INVERT AND STRUCTURE TOP AND BOTTOM ELEVATIONS SHALL BE RECORDED AND CLEARLY DENOTED AS "AS-BUILT" INFORMATION. DESIGN ELEVATIONS SHALL BE CROSSED OUT AND "AS-BUILT" INFORMATION WRITTEN NEXT TO IT.
5. STORM DRAINAGE PIPE MATERIAL, LENGTH, AND SIZE SHALL BE MEASURED AND/OR VERIFIED. THIS INFORMATION TO CLEARLY INDICATE IT AS BEING "AS-BUILT" INFORMATION.
6. ALL APPLICABLE TOPOGRAPHIC INFORMATION, PERTINENT TO THE ON SITE DRAINAGE SYSTEM SUCH AS DITCHES, LAKES, CANALS, ETC. THAT ARE DEEMED APPROPRIATE BY THE CITY SHALL BE NOTED. NORMALLY, RECORDING ELEVATIONS EVERY 100 FEET AT THE TOP OF BANK AND TOE OF SLOPE WILL BE REQUIRED. MEASUREMENTS SHALL BE TAKEN AND RECORDED IN ORDER TO ACCURATELY TIE DOWN THESE FEATURES TO THE ROADWAY CENTERLINES AND TO PLAT LINES. WHENEVER POSSIBLE, CONTOUR LINES SHALL BE UTILIZED TO GRAPHICALLY DESCRIBE THESE TOPOGRAPHIC FEATURES.
7. RETENTION AREAS SHALL HAVE THEIR TOP-OF-BANK AND BOTTOM ELEVATIONS RECORDED. ACTUAL MEASUREMENTS SHALL BE TAKEN AND DIMENSIONS RECORDED OF THE SIZE OF ALL RETENTION AREAS. MEASUREMENTS SHALL BE DONE FROM TOP-OF-BANK TO TOP-OF-BANK WITH SIDE SLOPES INDICATED. SEPARATE CALCULATIONS SHALL BE SUBMITTED TO INDICATE REQUIRED AND PROVIDED RETENTION VOLUMES.
8. STORM DRAINAGE SWALE CENTERLINES SHALL BE LOCATED AND ELEVATIONS OF FLOW LINE SHALL BE RECORDED EVERY 100 FEET.
9. ANY SPECIAL FEATURES SUCH AS CONCRETE FLUMES, LAKE BANKS, WALLS, FENCING, ETC., WHICH WERE A PART OF THE APPROVED CONSTRUCTION DRAWINGS SHOULD ALSO BE LOCATED AND DIMENSIONED.
10. ACTUAL MATERIALS USED AND ELEVATIONS AND DIMENSIONS OF OVERFLOW WEIR STRUCTURES AND SKIMMERS SHALL BE NOTED ON THE "AS-BUILT".

THE FOLLOWING INFORMATION IS REQUIRED ON ALL WATER AND SEWER "AS-BUILT" DRAWINGS:

11. SANITARY SEWER MANHOLES SHALL BE VERIFIED AND DIMENSIONED FROM STREET CENTERLINES OR LOT LINES AS APPROPRIATE. ALL RIM AND INVERT ELEVATIONS SHALL BE VERIFIED AND RECORDED. THIS INFORMATION TO CLEARLY INDICATE IT AS BEING "AS-BUILT" INFORMATION.
12. SANITARY SEWER LINE LENGTHS, SIZES, MATERIAL, SLOPE, ETC., SHALL BE VERIFIED AND RECORDED. THIS INFORMATION TO CLEARLY INDICATE IT AS BEING "AS-BUILT" INFORMATION.
13. SEWER LATERALS SHALL BE VERIFIED AND RECORDED AT THEIR CLEAN-OUT LOCATIONS. STATIONING AND OFFSET DISTANCES SHALL BE MEASURED FROM DOWNSTREAM MANHOLES TOWARDS UPSTREAM MANHOLES.
14. LIFT STATIONS AND FORCE MAINS SHALL BE VERIFIED AND DIMENSIONED FROM STREET CENTERLINES OR LOT LINES AS APPROPRIATE. FORCE MAIN DEPTH AND LOCATION INCLUDING VALVES WILL BE PROVIDED AND TIED TO PERMANENT ABOVE GRADE FEATURES EVERY 500 FEET. DIMENSIONAL AND ELEVATION INFORMATION INDICATED ON THE APPROVED PLAN SHALL BE VERIFIED AND RECORDED. THIS INFORMATION TO CLEARLY INDICATE IT AS BEING "AS-BUILT" INFORMATION. BURIED ELECTRICAL SERVICE LINE SHALL BE CLEARLY DIMENSIONED, LOCATED AND LABELED.
15. CURB CUTS OR METAL TABS, USED TO MARK SEWER LATERALS, WATER SERVICES AND WATER VALVES, SHALL BE VERIFIED FOR PRESENCE AND ACCURACY OF LOCATION.
16. WATER MAIN LINES SHALL BE DIMENSIONED OFF THE BACK OF CURB OR EDGE OF PAVEMENT IF NO CURB IS PRESENT. WATER MAIN LINE MATERIAL, SIZE, LENGTH AND DEPTH PLACED SHALL ALSO BE NOTED. THIS INFORMATION TO CLEARLY INDICATE IT AS BEING "AS-BUILT" INFORMATION.
17. WATER VALVES, TEES, ALL SERVICES, BLOW - OFFS AND FIRE HYDRANTS SHALL BE LOCATED BY TYING THEM TO SANITARY SEWER MANHOLES. STATIONING AND OFFSET DISTANCES SHALL BE MEASURED FROM DOWNSTREAM MANHOLES TO UPSTREAM MANHOLES.

THE FOLLOWING INFORMATION IS GENERAL REQUIREMENTS OF ALL "AS-BUILT" DRAWINGS:

18. FOR PERPENDICULAR CROSSINGS OF STORMWATER, SANITARY SEWER, POTABLE WATER, OR RECLAIMED WATER, THE "AS-BUILT" PLANS SHALL CLEARLY INDICATE WHICH UTILITIES ARE LOCATED OVER OR UNDER OTHER UTILITIES, AS NECESSARY.
19. WHEN STORMWATER, POTABLE WATER, RECLAIMED WATER, OR SANITARY SEWER IMPROVEMENTS ARE LOCATED WITHIN AN EASEMENT, THE "AS-BUILT" SHALL ACCURATELY DEPICT THE LOCATION OF THE EASEMENT ITSELF AS WELL AS THE EXACT LOCATION OF THE IMPROVEMENTS WITHIN THE EASEMENT. THIS IS REQUIRED IN ORDER TO VERIFY THAT THE IMPROVEMENTS HAVE BEEN PROPERLY LOCATED AND TO ENSURE THAT FUTURE SUBSURFACE EXCAVATION TO PERFORM REMEDIAL REPAIR CAN BE ACCOMPLISHED WITHOUT DISTURBANCE BEYOND THE EASEMENT. SUCH DOCUMENTATION AND THE ASSOCIATED PROPOSED EASEMENT DOCUMENT WITH LEGAL DESCRIPTION SHALL BE SUBMITTED FOR CITY REVIEW AND APPROVAL PRIOR TO RECORDING OF SAID EASEMENT. UPON CITY APPROVAL, THE EASEMENT SHALL BE RECORDED VIA A SEPARATE LEGAL INSTRUMENT AND SHALL NOT BE INCLUDED AS PART OF HOMEOWNER COVENANTS AND RESTRICTIONS.
20. SUBMIT CERTIFIED PAPER PRELIMINARY "AS-BUILT" WITH REQUEST FOR FINAL INSPECTION. SUBMIT 3 SETS SHOWING WATER FACILITIES, 3 SETS WITH SEWER FACILITIES, AND 3 SETS WITH PAVING AND DRAINAGE FACILITIES. FOLLOWING FINAL INSPECTION AND COMMENTS, THE CONTRACTOR SHALL REVISE AS-BUILTS TO ADDRESS CITY COMMENTS AND SUBMIT 3 SETS CERTIFIED FINAL "AS-BUILTS" ALONG WITH 1 SET CERTIFIED MYLARS AND 1 CD-ROM CONTAINING AUTO-CAD FILES AND PDF VERSIONS SHOWING ALL "AS-BUILT" SHEETS. ALL "AS-BUILT" DRAWINGS SHALL BE CERTIFIED BY A REGISTERED LAND SURVEYOR AND ENGINEER OF RECORD.
21. INDICATE VERTICAL DATUM REFERENCE ON ALL SHEETS.
22. CAD FILE OF "AS-BUILTS" SHALL BE IN STATE PLANE COORDINATES; FILE SHOULD INCLUDE REFERENCE TO PROJECTION. (FLORIDA EAST, NAD83)
23. ALL "AS-BUILT" DRAWINGS SHALL BE PREPARED BY A FLORIDA REGISTERED LAND SURVEYOR USING THE FINAL APPROVED SITE DESIGN PREPARED BY THE ENGINEER OF RECORD. LINE WEIGHTS, LINETYPES, AND ANNOTATION SHALL BE MANAGED IN A MANNER THAT CLEARLY DISTINGUISHES DESIGN INFORMATION FROM "AS-BUILT" INFORMATION.
24. ALL "AS-BUILT" SHEETS SHALL INCLUDE A TITLE BLOCK AND CLEARLY STATE PROJECT NAME, PROJECT SURVEYOR, DATE OF FIELD WORK, AS WELL AS PROJECT CERTIFICATION BLOCK FROM THE ENGINEER OF RECORD.

NOTE: REFERENCES TO WATER SHALL MEAN BOTH POTABLE AND RECLAIMED WATER.

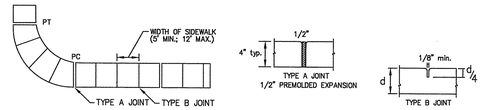

1. SIDEWALKS, BIKEPATHS, RAMPS, AND DRIVEWAY APRONS SHALL BE CONSTRUCTED OF PLAIN PORTLAND CEMENT CONCRETE WITH A MAXIMUM SLUMP OF 3 INCHES, A MINIMUM DEVELOPED COMPRESSIVE STRENGTH OF 2500 P.S.I. IN 28 DAYS, AND A MINIMUM UNIFORM THICKNESS OF 4 INCHES WHERE INTENDED SOLELY FOR PEDESTRIAN TRAFFIC, AND 6 INCHES THICK WHERE MOTOR VEHICLES ARE LIKELY TO CROSS. SIDEWALKS SHALL BE 5 FOOT WIDE UNLESS OTHERWISE SHOWN ON PLANS.
2. SIDEWALKS AND BIKE PATHS SHALL BE PLACED PARALLEL TO, AND ONE FOOT WITHIN THE RIGHT-OF-WAY LINE EXCEPT THAT THE CITY MAY APPROVE DEVIATIONS TO SAVE SPECIMEN TREES PROVIDED THAT THE PAVEMENT REMAINS WITHIN THE RIGHT-OF-WAY, IS NOT DIMINISHED IN WIDTH, AND REMAINS AT LEAST 4 FEET FROM THE EDGE OF THE STREET PAVEMENT, UNLESS OTHERWISE APPROVED BY THE CITY.
3. THE TOP OF THE CONCRETE SHALL BE AT AN ELEVATION NO LOWER THAN THE CROWN OF THE ADJACENT ROADWAY, AND NO HIGHER THAN 6 INCHES ABOVE THE CROWN UNLESS APPROVED BY THE CITY TO MAKE A MORE NATURAL TRANSITION WITH THE ADJACENT LAND.
4. ALL WALKS SHALL HAVE A CROSS SLOPE OF 1/4 INCH PER FOOT AND SHALL NOT EXCEED A LONGITUDINAL SLOPE OF 1:20, EXCEPT AT DESIGNATED RAMPS THAT SHALL NOT EXCEED 1:12. PROVIDE A TACTIBLE WARNING SURFACE AT ALL RAMPS PER A.D.A. THE CONTRACTOR SHALL INSURE THAT ALL PROVISIONS OF A.D.A AND FLORIDA ACCESSIBILITY CODE ARE MET.*
5. ISOLATION JOINTS (TYPE A JOINTS) SHALL BE PROVIDED BETWEEN EXISTING SLABS OR STRUCTURES AND FRESH CONCRETE, TO SEPARATE PEDESTRIAN SECTIONS FROM SECTIONS WHICH WILL ENCOUNTER VEHICLE TRAFFIC, TO SEPARATE FRESH PLACEMENT FROM CONCRETE WHICH HAS SET FOR MORE THAN 60 MINUTES, AND NO FARTHER APART THAN 100 FEET IN SIDEWALKS AND BIKEPATHS. JOINT MATERIAL SHALL BE SPECIFIED IN FDOT STANDARDS AND SPECIFICATIONS AND SHALL BE RUBBER, PLASTIC OR OTHER APPROVED NON-BIODEGRADABLE ELASTOMERIC MATERIAL. WOOD IS PROHIBITED.
6. CONTROL JOINTS (TYPE B JOINTS) SHALL BE TOOLED INTO THE FRESH CONCRETE TO A DEPTH EQUAL TO 1/4 THE SLAB THICKNESS AND SPACED APART A DISTANCE EQUAL TO THE WIDTH OF THE SLAB, AT MINIMUM SPACING OF 5', MAX SPACING OF 12'.
7. THE SLAB SURFACE SHALL BE BROOM FINISHED TO BE SLIP RESISTANT, AND SHALL MATCH AS CLOSELY AS POSSIBLE THE FINISH OF THE EXISTING ADJACENT SLABS AND ALL EDGES SHALL BE TOOLED TO ELIMINATE SHARP CORNERS.
8. THE BEARING SUBSURFACE SHALL HAVE ALL ORGANIC, LOOSE, AND DELETERIOUS MATTER REMOVED, AND THE REMAINING CLEAN SOIL SHALL BE SMOOTH, SOUND, AND SOLID. ANY FILL MATERIAL SHALL BE COMPACTED WITH A VIBRATORY OR IMPACT COMPACTION MACHINE IN MAXIMUM 12 INCH LIFTS OR COMPACTED WITH A HAND TAMPER IN MAXIMUM 4 INCH LIFTS. THE CITY SHALL REQUIRE A COMPACTION TEST FOR EACH LIFT IF THE TOTAL FILLED SECTION IS MORE THAN 12 INCHES DEEP OR IF THE SUBSURFACE HAS BEEN DISTURBED MORE THAN 12 INCHES DEEP. WHERE SUCH TEST IS REQUIRED, THE RESULTS SHALL SHOW A MINIMUM PROCTOR FIELD DENSITY OF 95 PERCENT.
9. ALL CONCRETE WORK IN THE RIGHT-OF-WAY SHALL BE INSPECTED BY THE CITY AFTER THE SUBSOIL IS PREPARED AND THE FORMS ARE SET, BUT BEFORE THE CONCRETE PLACEMENT BEGINS.
10. THE CONTRACTOR SHALL BE RESPONSIBLE FOR PROTECTING THE FINISHED SLAB FROM ALL DAMAGE AND VANDALISM UNTIL THE CITY ACCEPTS OR APPROVES THE SLAB, AFTER WHICH TIME THE OWNER OF THE ABUTTING LAND SHALL BE RESPONSIBLE FOR THE SLAB IN ACCORDANCE WITH THE CITY CODE. ANY SLAB SECTION DAMAGED OR VANDALIZED PRIOR TO ACCEPTANCE OR APPROVAL SHALL BE CUT OUT BETWEEN JOINTS AND REPLACED. REPAIRS ARE NOT ACCEPTABLE.
11. SIDEWALKS LOCATED WITHIN THE RIGHT-OF-WAY SHALL NOT BE TINTED, STAINED, COLORED, OR COATED.
12. ALL FORMS SHALL BE REMOVED PRIOR TO ACCEPTANCE OR APPROVAL AND THE DISTURBED GROUND SHALL BE BACKFILLED, REGRADED, AND SODDED SO THAT THE WEAR SURFACE OF THE CONCRETE IS REASONABLY FLUSH WITH THE ADJACENT GRADE.

SIDEWALK, RAMP, AND DRIVEWAY APRON CONSTRUCTION REQUIREMENTS

M-3

JAN. 2012

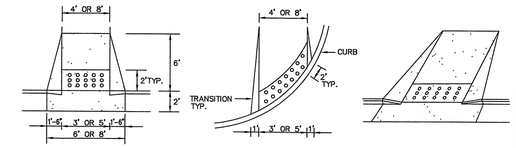

NOTES:

1. RAMP LOCATIONS ARE TO BE COORDINATED WITH AND IN CONFORMANCE WITH CROSSWALK MARKING DETAILS SHOWN IN THE PLANS.
2. CURBED RAMPS SHALL HAVE FLARED SIDES WITH A MAXIMUM SLOPE OF 12:1.
3. RAMPS SHALL HAVE A DETECTABLE WARNING SURFACE AS SHOWN.
4. RAMPS ARE TO BE CONSTRUCTED AT ALL LOCATIONS SHOWN IN THE PLANS EVEN WHEN A SIDEWALK IS NOT CONSTRUCTED CONCURRENTLY.
5. NO CURB TRANSITION IS NEEDED FOR MIAMI CURBS.
6. ALL RAMPS SHALL BE CONSTRUCTED IN ACCORDANCE WITH FDOT INDEX NO. 304 AND HANDICAPPED ACCESSIBILITY REQUIREMENTS IN ACCORDANCE WITH THE AMERICAN DISABILITIES ACT.

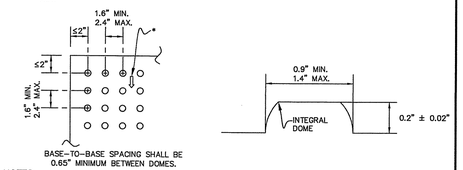

NOTES:

* ON RAMPS TAT ARE PERPENDICULAR WITH THE CURB LINE, THE DOME PATTERN SHALL BE IN-LINE WITH THE DIRECTION OF TRAVEL. ON RAMPS INTERSECTING CURBS ON A RADIUS, THE DOME PATTERN SHALL BE IN-LINE WITH THE DIRECTION OF TRAVEL TO THE EXTENT PRACTICAL.

SIDEWALK AND BIKE PATH RAMP

M-4

JAN. 2012

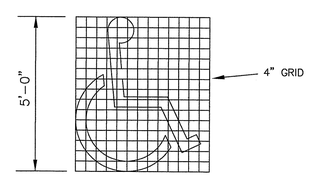

HANDICAPPED PAVEMENT SYMBOL

USE OF PAVEMENT SYMBOL IN HANDICAPPED PARKING SPACES IS REQUIRED. WHEN USED THE SYMBOL SHALL BE 5 FT. HIGH AND WHITE IN COLOR. TO BE INSTALLED IN ACCORDANCE WITH FDOT STANDARD INDEX #17346

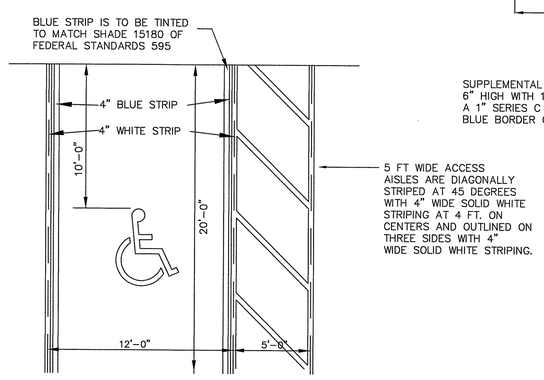

TYPICAL MARKINGS FOR HANDICAPPED PARKING

M-12A

JAN 2012

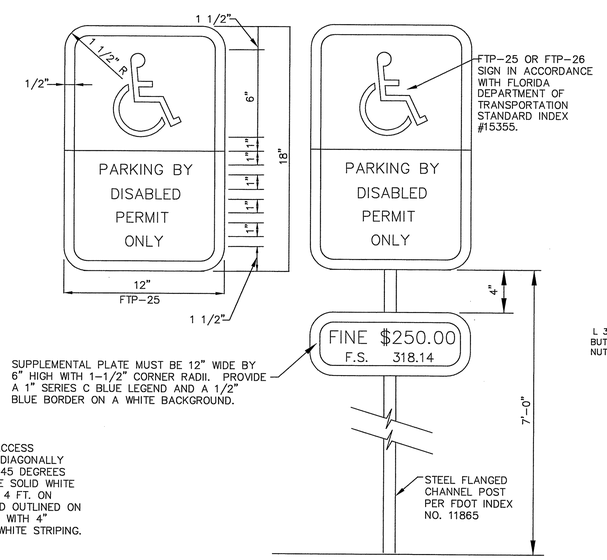

1.) TOP PORTION OF SIGN TO HAVE A REFLECTIVE BLUE BACKGROUND WITH WHITE REFLECTIVE SYMBOL AND BORDER.

2.) BOTTOM PORTION SHALL HAVE A REFLECTIVE WHITE BACKGROUND WITH BLACK OPAQUE LEGEND AND BORDER.

3.) SIGN MAY BE FABRICATED ON ONE PANEL OR TWO.

4.) SIGNS ARE TO BE MOUNTED AT STANDARD HEIGHT. (7' FROM PAVEMENT TO BOTTOM OF SIGN.)

HANDICAP PARKING SIGN DETAIL

M-12B

JAN 2012

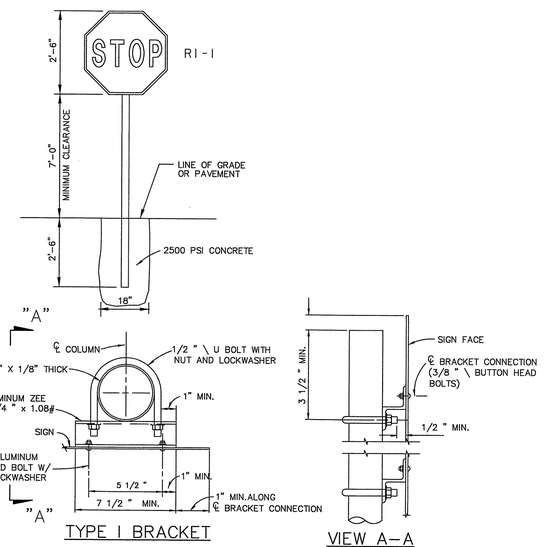

STOP/MISC. SIGN CONSTRUCTION DETAIL

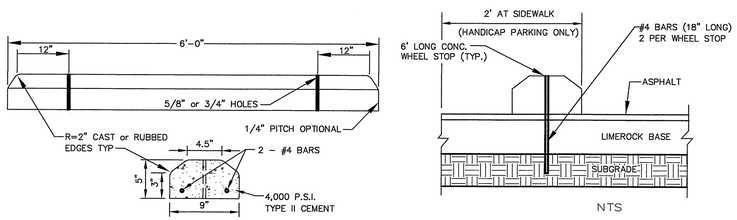

NTS

NOTES:

1. CENTER WHEEL STOP IN EACH STALL

WHEEL STOP DETAIL

NO.	DATE	DESCRIPTION	BY
		REVISIONS	

PARKER MYNCHENBERG & ASSOCIATES, INC.

PROFESSIONAL ENGINEERS * LANDSCAPE ARCHITECTS

1729 RIDGEWOOD AVENUE HOLLY HILL, FLORIDA 32117

(386)677-6891 FAX(386)677-2114 E-MAIL: info@parkermynchenberg.com

CERTIFICATE OF AUTHORIZATION NUMBER: 00003910

PAVING & DRAINAGE DETAILS

ORMOND RENAISSANCE CONDOMINIUM

ORMOND BEACH * FLORIDA

FILE NO. 13-49PD.DWG	DESIGNER: P.MYNCHENBERG	
DATE: 12.12.13	CADD TECH: C.HARNDEN	
SCALE: NONE	SHEET 42 OF 48	SEAL

X:\Bruce Work\Bruce Work\RENAISSANCE\RENAISSANCE15-49PD.dwg, 2/26/2014 3:56:58 PM, HP Designjet T1100 44in HPGL2.pc5, Arch D (landscape), 1:1

STORM DRAINAGE CONSTRUCTION NOTES

1. CONSTRUCTION STANDARDS FOR ALL DRAINAGE SYSTEM COMPONENTS SHALL CONFORM TO THE LATEST EDITION OF THE "FDOT STANDARD SPECIFICATIONS FOR ROAD AND BRIDGE CONSTRUCTION" AND AS SPECIFIED HEREIN.
2. ALL STORMWATER PIPES AND STRUCTURES SHALL BE INSTALLED ON A FIRM FOUNDATION WITH ALL UNSUITABLE MATERIAL (MUCK, ROCK, COQUINA, ETC.) REMOVED AND REPLACED WITH CLEAN GRANULAR MATERIAL.
3. DEWATERING SHALL BE PROVIDED TO KEEP GROUNDWATER ELEVATION A MINIMUM OF 6 INCHES BELOW THE COMPONENT BEING INSTALLED.
4. ALL PIPES AND STRUCTURES SHALL BE PLACED TRUE TO LINES AND GRADES AS DEPICTED ON THE APPROVED PLANS.
5. ALL PIPE JOINTS SHALL BE PROPERLY HONED AND FILTER FABRIC LINED USING A METHOD TO HOLD THE FABRIC IN PLACE DURING BACKFILL.
6. BACKFILL AND COMPACT TO THE SPRING-LINE (CENTER OF PIPE) ELEVATION AND REQUEST CITY INSPECTION AND APPROVAL BEFORE CONTINUING.
7. ALL WORK COVERED WITHOUT CITY INSPECTION WILL BE REQUIRED TO BE EXCAVATED AND INSPECTED AT THE CONTRACTOR'S EXPENSE.
8. TRENCHES SHALL BE BACKFILLED AND COMPACTED WITH CLEAN GRANULAR MATERIAL IN MAX 6" LIFTS WITH A MINIMUM COMPACTION OF 98 PERCENT (AASHTO-T180) IN PAVED AREAS AND 95 PERCENT (AASHTO-T180) IN UNPAVED AREAS.
9. IT SHALL BE THE CONTRACTOR'S RESPONSIBILITY TO ENSURE THAT TRENCH COMPACTION TESTS AT POINTS 1' ABOVE THE PIPE AND AT A MAX. 1' VERTICAL INTERVALS TO FINISH GRADE, AT A MAXIMUM SPACING OF 100 FEET, AND TO FURNISH COPIES OF TEST REPORTS PROMPTLY TO THE CITY'S INSPECTOR.
10. ALL STORM SEWER PIPE SHALL BE REINFORCED CONCRETE (RCP), HIGH DENSITY POLYETHYLENE (HDPE), POLYVINYL CHLORIDE (PVC) OR ALUMINUM CORRIGATED METAL PIPE (ACMP), AS SHOWN ON THE PLANS.
11. STORM DRAINAGE PIPES WITHIN PUBLIC RIGHT-OF-WAY SHALL BE A MINIMUM OF FIFTEEN (15) INCH RCP DIAMETER OR EQUIVALENT.
12. STORM INLETS, MANHOLES, AND CATCH BASINS SHALL BE EITHER POURED IN PLACE OR PRECAST REINFORCED CONCRETE. STRUCTURES SHALL BE REQUIRED AT EACH CHANGE OF PIPE SIZE OR CHANGE IN PIPE DIRECTION.
13. STORM INLETS SHALL BE SPACED IN SUCH A MANNER AS TO ACCEPT ONE HUNDRED (100) PERCENT OF THE DESIGN STORM RUNOFF.
14. WET DETENTION PONDS SHALL BE EIGHT (8) FEET MINIMUM TO TWELVE (12) FEET MAXIMUM DEPTH BELOW THE DESIGN LOW OR NORMAL WATER STAGE.
15. MAXIMUM DISTANCES BETWEEN INLETS AND/OR JUNCTION BOXES:

PIPES SIZE (INCHES)	LENGTH OF RUN (FEET)
15	150
18	300
24 OR GREATER	400

16. ALL SWALES, DITCHES, AND DRY RETENTION POND SIDE SLOPES SHALL BE NO STEEPER THAT 4:1 (H:V) AND SHALL BE SODDED.
17. ALL RETENTION POND BACKSLOPES SHALL BE NO STEEPER THAN 3:1 (H:V) AND SHALL BE SODDED.
18. NORMAL ROADSIDE SWALES SHALL BE CONSTRUCTED TO A MAXIMUM DEPTH OF 18" BELOW THE OUTSIDE EDGE OF PAVEMENT OR CONCRETE CURB.
19. CONCRETE EROSION CONTROL MUST BE PROVIDED WHERE SWALES OR CULVERTS INTERCEPT DRAINAGE DITCHES.
20. A MINIMUM ONE FOOT (1') FREEBOARD ABOVE THE DESIGN HIGH WATER ELEVATION IS REQUIRED AT ALL POINTS AROUND WET RETENTION PONDS.
21. A MINIMUM SIX INCH (6") FREEBOARD ABOVE THE DESIGN HIGH WATER ELEVATION IS REQUIRED AT ALL POINTS AROUND DRY RETENTION PONDS.
22. POND INFLOW SHALL GENERALLY BE CONSTRUCTED WITH REINFORCED CONCRETE AND SHALL BE SUBJECT TO THE APPROVAL OF THE CITY.
23. OUTLET STRUCTURES ARE REQUIRED ON ALL PONDS. ALL OUTLET STRUCTURES SHALL BE PERMANENT CONCRETE OVERFLOW WEIRS OR CONCRETE OUTLET CONTROL STRUCTURES. NO SODDED WEIRS OR OTHER NON-PERMANENT OVERFLOW STRUCTURES SHALL BE ALLOWED.
24. SOIL EROSION CONTROL MEASURES SATISFACTORY TO THE CITY, SHALL BE EMPLOYED DURING CONSTRUCTION AND UPON COMPLETION OF THE POND.
25. THE CITY MAY REQUEST THAT THE DEVELOPER SUBMIT A REPORT BY A QUALIFIED HYDROLOGIST ON THE IMPACT THE POND WILL HAVE ON NEIGHBORING WATER TABLE ELEVATIONS BOTH DURING CONSTRUCTION AND AFTER POND COMPLETION. THE CITY MAY REQUIRE GROUNDWATER MONITORING DURING THE POND EXCAVATION.
26. ADEQUATE MAINTENANCE ACCESS AS APPROVED BY THE CITY SHALL BE PROVIDED AROUND THE ENTIRE PERIMETER OF ALL PONDS AND ASSOCIATED OUTFALLS DISCHARGING INTO AND OUT OF PONDS.
27. IN GENERAL, ALL RETENTION/DETENTION PONDS MUST BE CONSTRUCTED PRIOR TO ANY ROAD, PARKING LOT, OR BUILDING CONSTRUCTION COMMENCING OR AS CURRENT PERMIT CONDITIONS DICTATE.
28. THE CONTRACTOR SHALL BE RESPONSIBLE TO OBTAIN ANY DEWATERING PERMITS THAT MAY BE REQUIRED.
29. CULVERTS CROSSING RIGHT-OF-WAYS SHALL EXTEND FROM RIGHT-OF-WAY LINE TO RIGHT-OF-WAY LINE UNDER THE ROADWAY.
30. ALL STORMWATER DISCHARGE FROM RETENTION/DETENTION PONDS ARE REQUIRED TO BE CHANNELED INTO DEFINED DRAINAGE PATHS TO EXISTING WATER BODIES, WETLANDS, DITCHES, ETC.
31. THE CITY OF ORMOND BEACH REQUIRES THE DEVELOPER TO TELEVISE ANY AND ALL STORM SEWER PIPE SYSTEMS IN THE PRESENCE OF THE CITY INSPECTOR BY A REPUTABLE COMPANY THAT ENGAGES IN THIS TYPE OF WORK. THE VIDEO SHALL BE IN HIGH QUALITY STANDARD RESOLUTION USING A CAMERA WITH SUITABLE LIGHTING TO ALLOW A CLEAR FOCUSED PICTURE OF THE ENTIRE INSIDE PIPE CIRCUMFERENCE. THE VIDEO SHALL BE NON-STOP WITH AUDIO DESCRIBING WHAT IS BEING VIEWED. COPIES OF VIDEO SHALL BE SUBMITTED IN DVD FORMAT ACCOMPANIED BY WRITTEN LOGS DESCRIBING THE CONDITION OF THE LINES AT LEAST FORTY-EIGHT (48) HOURS PRIOR TO REQUESTING FINAL INSPECTIONS. ANY DEFECTS NOTED SHALL BE CORRECTED PRIOR TO ACCEPTANCE BY THE CITY OR ISSUANCE OF CERTIFICATE OF OCCUPANCY.

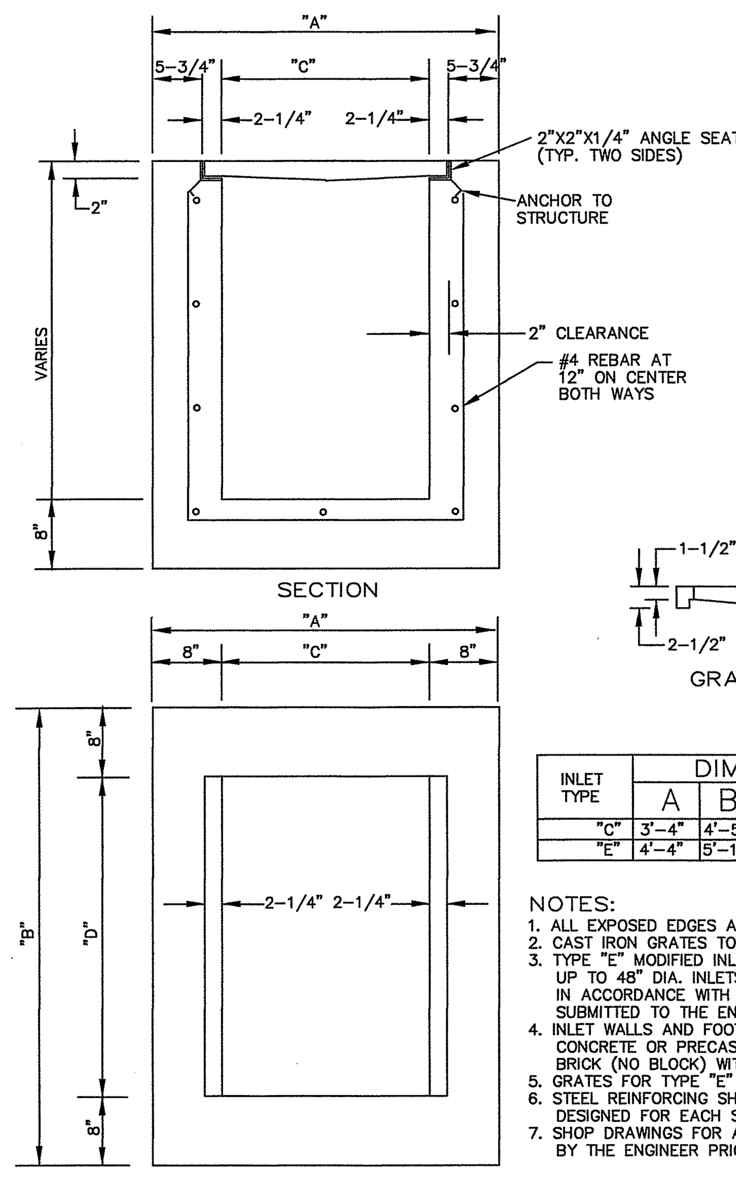

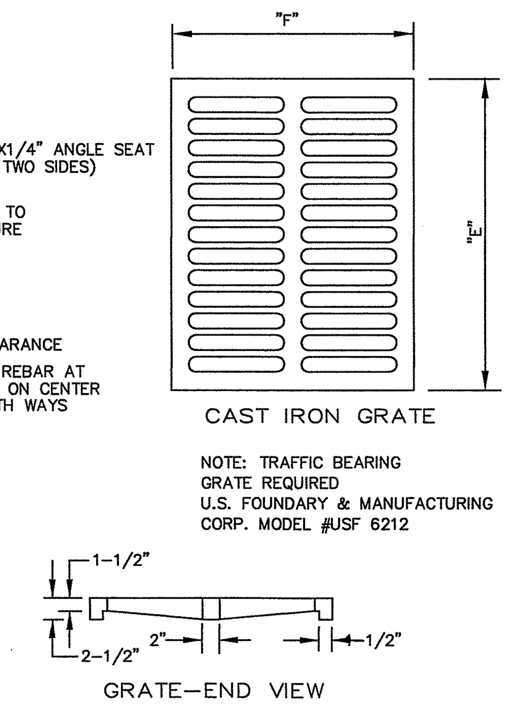

INLET TYPE	DIMENSIONS A	B	C	D	E	F
"C"	3'-4"	4'-5"	2'-0"	3'-1"	3'-0"	2'-4"
"E"	4'-4"	5'-10"	3'-0"	4'-6"	4'-4"	3'-4"

NOTES:
1. ALL EXPOSED EDGES AND CORNERS TO BE CHAMFERED 3/4".
2. CAST IRON GRATES TO BE IN ACCORDANCE WITH FLORIDA D.O.T. SPECS.
3. TYPE "E" MODIFIED INLET IS A TYPE "E" TURNED 90° TO RECEIVE R.C.P.'S UP TO 48" DIA. INLETS RECEIVING R.C.P.'S LARGER THAN 48" DIA. SHALL BE IN ACCORDANCE WITH FLORIDA D.O.T. STANDARDS, AND SHOP DRAWINGS SHALL BE SUBMITTED TO THE ENGINEER FOR APPROVAL PRIOR TO INSTALLATION.
4. INLET WALLS AND FOOTINGS MAY BE EITHER POURED-IN-PLACE 2500 LB. CONCRETE OR PRECAST CLASS "A" 3000 LB. CONCRETE OR STANDARD MANHOLE BRICK (NO BLOCK) WITH 1/2" PLASTER (NO LIME) W/ 8" PRECAST CAP.
5. GRATES FOR TYPE "E" AND "E" MOD. ARE TO BE CAST IN TWO SECTIONS.
6. STEEL REINFORCING SHALL BE DESIGNED BY A FLA. REG. P.E., AND BE DESIGNED FOR EACH SPECIFIC STRUCTURE.
7. SHOP DRAWINGS FOR ALL STRUCTURES SHALL BE SUBMITTED TO AND APPROVED BY THE ENGINEER PRIOR TO INSTALLATION.

FDOT TYPE 'C' & 'E' INLET

DB ST-7 DATED 2-23-07
NTS

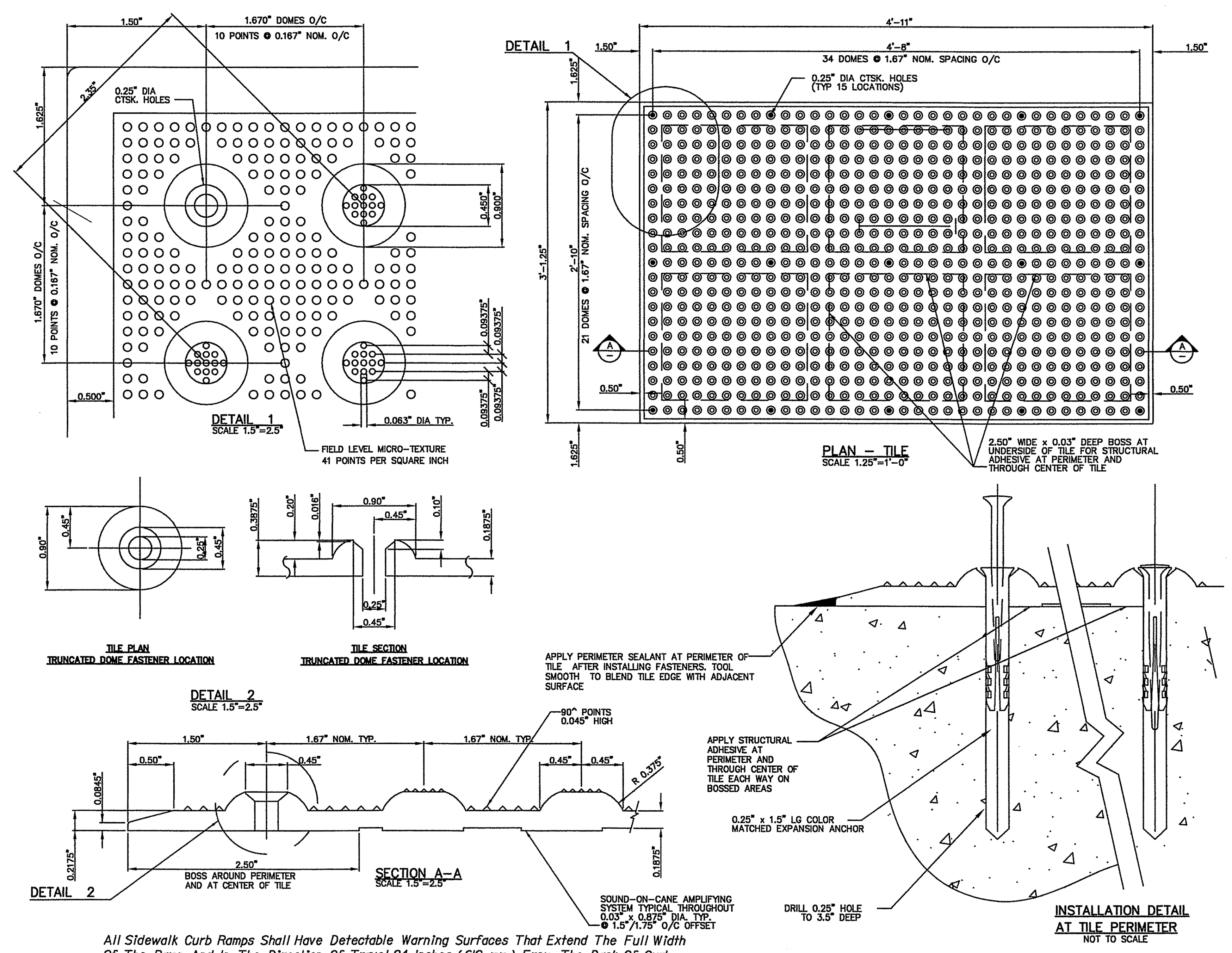

All Sidewalk Curb Ramps Shall Have Detectable Warning Surfaces That Extend The Full Width Of The Ramp And In The Direction Of Travel 24 Inches (610 mm) From The Back Of Curb.

NOTE: *On Ramps That Are Perpendicular With The Curb Line, The Dome Pattern Shall Be In-Line With The Direction Of Travel. On Ramps Intersecting Curbs On A Radius, The Dome Pattern Shall Be In-Line With The Direction Of Travel To The Extent Practical.*

CURB RAMP DETECTABLE WARNING DETAIL

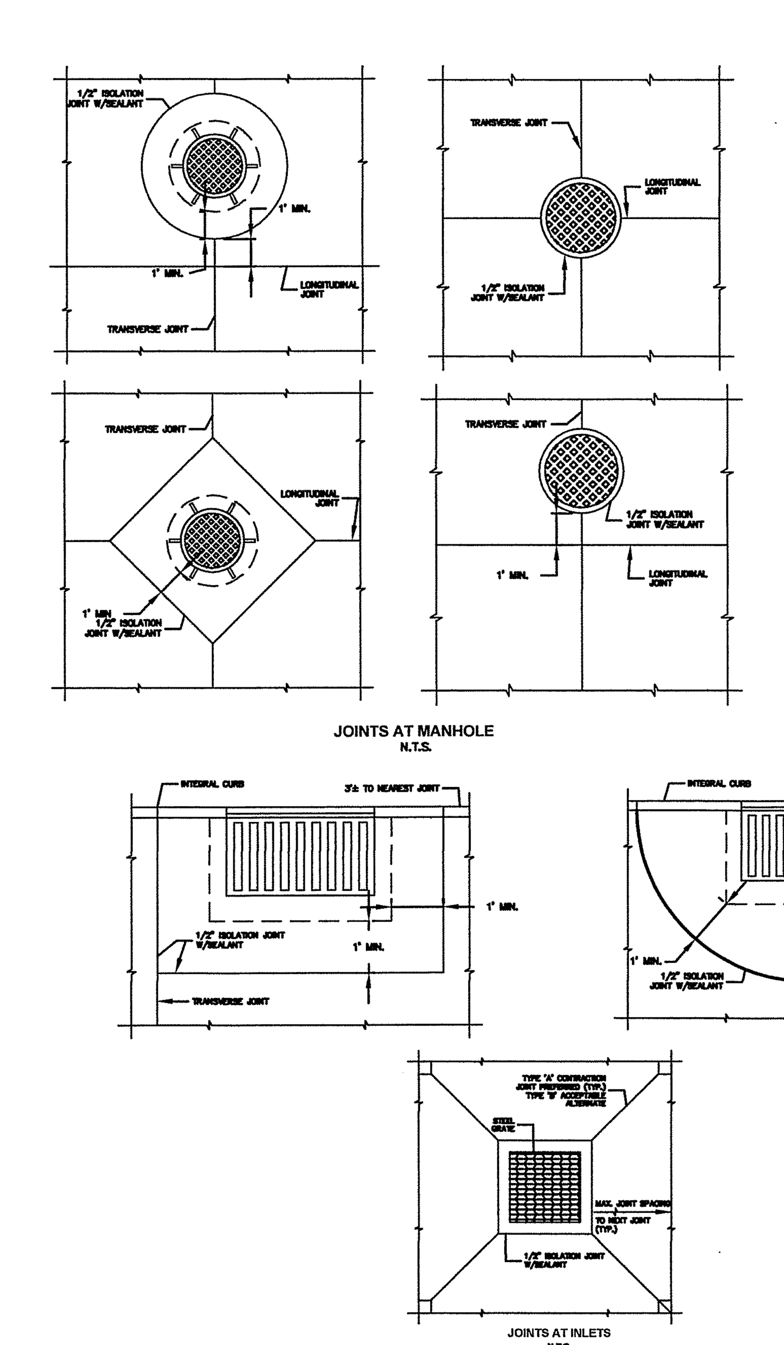

JOINT SPACING DETERMINATION:

1. LAYOUT CONTROL JOINT BY STARTING WITH ANY DRAINAGE INLET WITHIN THE PAVEMENT SECTION AND WORK TOWARD EDGE OF PAVEMENT
2. KEEP ALL JOINTS CONTINUOUS
3. CONTROL JOINTS SHALL BE FORMED OR SAWED WITHIN 12 HOURS FROM TIME OF PLACEMENT;
   A. SIDEWALK-SPACING SHALL BE SAME AS WIDTH OF PAVEMENT AND LESS THAN 5 FEET IN LENGTH
   B. PAVEMENT-MAXIMUM SPACING SHALL BE 2.5 TIMES THICKNESS IN UNIT OF FEET AND LESS THAN 15 FEET IN LENGTH (E.G. D=5 INCHES, SPACING AT 12'x12')

RECOMMENDED MAX. JOINT SPACINGS

PAVEMENT THICKNESS (INCHES)	RECOMMENDED MAXIMUM JOINT SPACING (FEET)
3.5 (FOR WHITETOPPING ONLY)	6
4.0	10
4.5	10
5.0	12
5.5	12
6.0	15
OVER 6.0	15

CITY OF ORMOND BEACH FLORIDA

STANDARD CONSTRUCTION DETAIL
CONCRETE PAVEMENT DETAILS
NTS

INDEX R-11B
JAN 2012

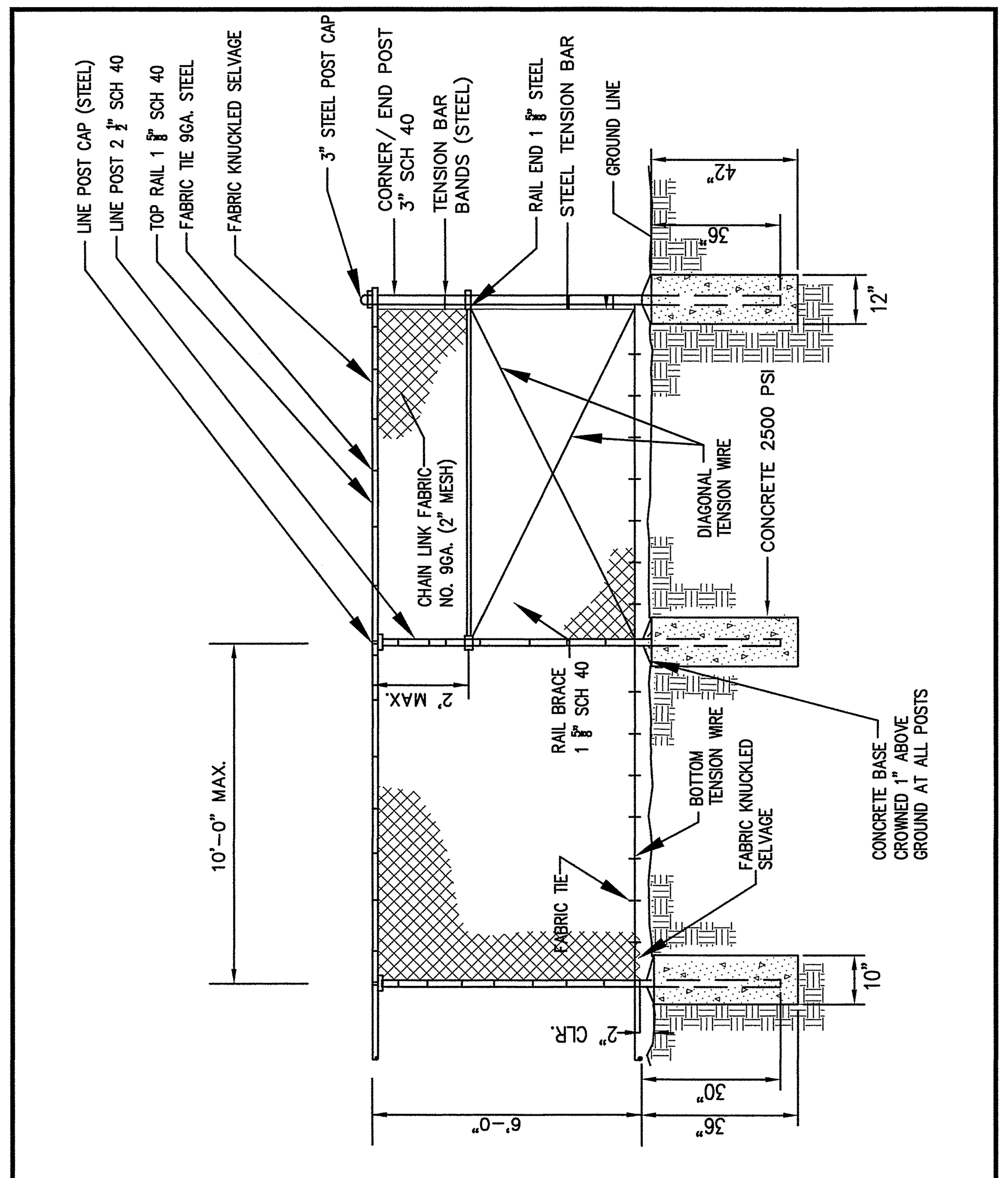

CITY OF ORMOND BEACH FLORIDA

STANDARD CONSTRUCTION DETAIL
6' HIGH CHAIN LINK FENCE DETAIL
NTS.

INDEX M-19
JAN 2012

NO.	DATE	DESCRIPTION	BY

REVISIONS

PARKER MYNCHENBERG & ASSOCIATES, INC.
PROFESSIONAL ENGINEERS * LANDSCAPE ARCHITECTS
1729 RIDGEWOOD AVENUE HOLLY HILL, FLORIDA 32117
(386)677-6891 FAX(386)677-2114 E-MAIL: info@parkermynchenberg.com
CERTIFICATE OF AUTHORIZATION NUMBER: 00003910

PAVING & DRAINAGE DETAILS

ORMOND RENAISSANCE CONDOMINIUM
ORMOND BEACH * FLORIDA

FILE NO. 13-49PD.DWG	DESIGNER: P.MYNCHENBERG
DATE: 12.12.13	CADD TECH: C.HARNDEN
SCALE: NONE	SHEET 43 OF 48

SEAL

X:\Bruce Work\Bruce Work\RENAISSANCE\RENAISSANCE\13-49PD.dwg, 2/26/2014 3:55:13 PM, HP Designjet T1100 44in HPGL2.pc3, Arch D (landscape), 1:1

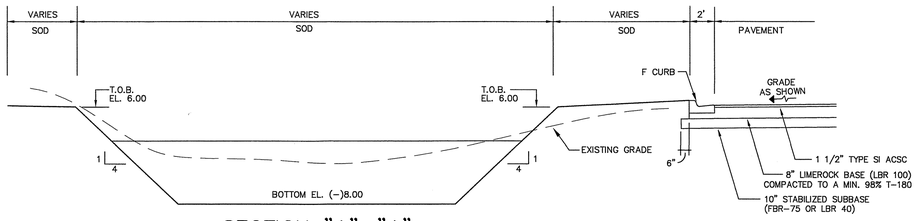

SECTION "A"–"A"

PROPOSED LAKE RETENTION

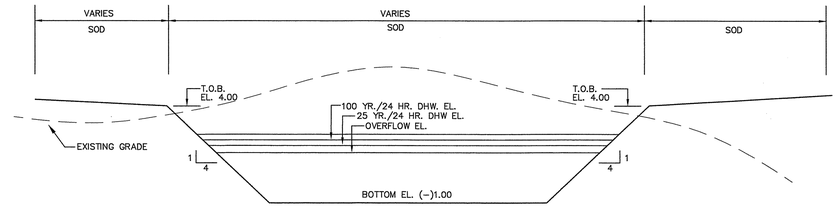

SECTION "B"–"B"

PROPOSED DRY RETENTION AREA "1"

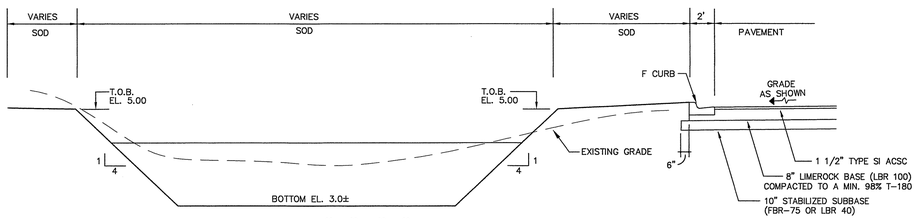

SECTION "C"–"C"

PROPOSED DRY RETENTION AREA "2"

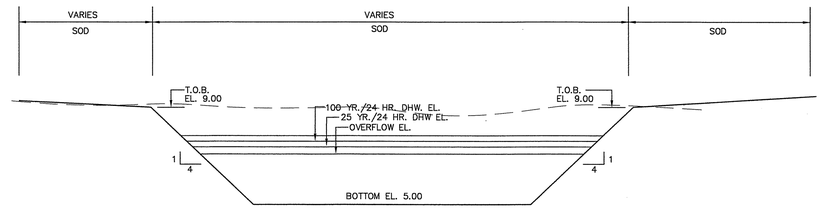

SECTION "D"–"D"

PROPOSED DRY RETENTION AREA "3"

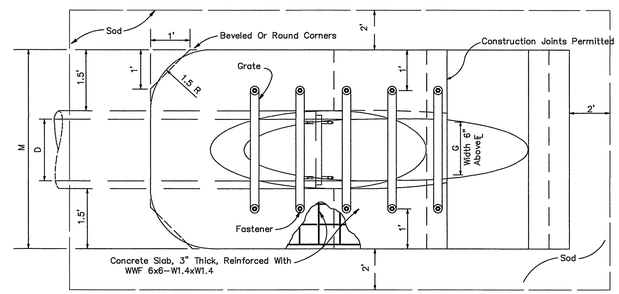

TOP–VIEW SINGLE PIPE

NOTES:

1. ROUND PIPE SIZES 30" AND GREATER AND ELLIPTICAL PIPE 19"X30" AND GREATER SHALL BE GRATED UNLESS OTHERWISE NOTED ON THE PLANS.

*Slope:
To Major Axis For Pipes 24" x 38" And Smaller
1:2 For Pipes 29" x 45" And Smaller

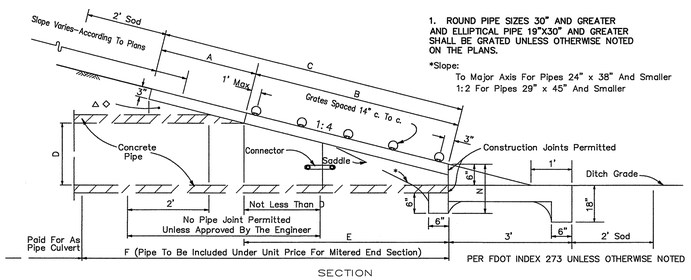

SECTION

FDOT MITERED END SECTION (SINGLE PIPE)

NTS

DIMENSIONS & QUANTITIES

D	X	A	B	C	E	F	G	M Single Pipe	M Double Pipe	M Triple Pipe	M Quad Pipe	N
15"	2'–7"	2.27'	4.09'	6.36'	4.03'	8'	1.22'	4.63'	7.21'	9.79'	12.37'	1.19'
18"	2'–10"	2.36'	5.12'	7.48'	5.03'	9'	1.41'	4.92'	7.75'	10.58'	13.42'	1.21'
24"	3'–5"	2.53'	7.18' △	9.71'	7.03'△	11'	1.73'	5.50'	8.92'	12.33'	15.75'	1.25'
30"	4'–3"	2.70'	9.25'	11.95'	9.03'	13'	2.00'	6.08'	10.33'	14.58'	18.83'	1.29'
36"	5'–1"	2.87'	11.31' ◇	14.18'	11.03'◇	15'	2.24'	6.67'	11.75'	16.83'	21.92'	1.33'
42"	6'–0"	3.05'	13.37'	16.42'	13.03'	17'	2.45'	7.25'	13.25'	19.25'	25.25'	1.38'
48"	6'–9"	3.22'	15.43'	18.65'	15.03'	19'	2.65'	7.83'	14.58'	21.33'	28.08'	1.42'
54"	7'–8"	3.39'	17.49'	20.88'	17.03'	21'	2.83'	8.42'	16.08'	23.75'	31.42'	1.46'
60"	8'–6"	3.58'	19.55'	23.11'	19.03'	23'	3.00'	9.00'	17.50'	26.00'	34.50'	1.50'

D	GRATE SIZES Standard Weight Pipe	GRATE SIZES Extra StrongPipe	CONCRETE (Cu. Yds.) Single Pipe	CONCRETE Double Pipe	CONCRETE Triple Pipe	CONCRETE Quad Pipe	SODDING (Sq. Yds.) Single Pipe	SODDING Double Pipe	SODDING Triple Pipe	SODDING Quad Pipe
15"			0.81	1.23	1.64	2.06	8	10	11	12
18"			0.90	1.36	1.82	2.30	9	10	12	13
24"			1.08	1.67	2.27	2.91	10	12	13	15
30"		3"	1.29	2.08	2.89	3.69	12	14	15	17
36"		3"	1.47	2.50	3.50	4.46	13	15	17	20
42"			1.67	2.96	4.23	5.51	14	17	19	22
48"			1.89	3.41	4.91	6.42	15	18	21	24
54"	3"	4"	2.11	3.94	5.78	7.59	17	20	23	27
60"	3"	4"	2.37	4.54	6.69	8.85	18	22	25	29

△ 6.42' △ 6.25' Dimensions permitted to allow use of 8' standard pipe lengths.
◇ 10.40' ◇ 10.10' Dimensions permitted to allow use of 12' standard pipe lengths.
△ ◇ Concrete slab shall be deepened to form bridge across crown of pipe. See section below.

NO.	DATE	DESCRIPTION	BY

REVISIONS

PARKER MYNCHENBERG & ASSOCIATES, INC.
PROFESSIONAL ENGINEERS * LANDSCAPE ARCHITECTS
1729 RIDGEWOOD AVENUE HOLLY HILL, FLORIDA 32117
(386)677–6891 FAX(386)677–2114 E–MAIL: info@parkermynchenberg.com
CERTIFICATE OF AUTHORIZATION NUMBER: 00003910

PAVING & DRAINAGE DETAILS

ORMOND RENAISSANCE CONDOMINIUM
ORMOND BEACH * FLORIDA

FILE NO. 13–49PD.DWG	DESIGNER: P.MYNCHENBERG
DATE: 12.12.13	CADD TECH: C.HARNDEN
SCALE: NONE	SHEET 44 OF 48

SEAL

X:\Bruce Work\Bruce Work\RENAISSANCE\RENAISSANCE\13-49PD.dwg 2/26/2014 3:31:16 PM, HP Designjet T1100 44in HPGL2 pc3, Arch D (landscape), 1:1

GENERAL NOTES
WATER SYSTEM CONSTRUCTION

1. THE CITY'S PUBLIC UTILITIES DEPARTMENT SHALL BE NOTIFIED PRIOR TO BEGINNING ANY WATER SYSTEM CONSTRUCTION.
2. DEWATERING SHALL BE PROVIDED TO KEEP GROUNDWATER ELEVATION A MINIMUM OF 6 INCHES BELOW WATER MAIN BEING LAID.
3. ALL WATER MAINS SHALL BE LAID ON A FIRM FOUNDATION WITH ALL UNSUITABLE MATERIAL (MUCK, ROCK, COQUINA, ETC.) REMOVED AND REPLACED WITH CLEAN GRANULAR MATERIAL.
4. TRENCHES SHALL BE BACKFILLED WITH CLEAN GRANULAR MATERIAL IN MAX. 1' LIFTS WITH A MINIMUM COMPACTION OF 98 PERCENT (AASHTO–T180) IN PAVED AREAS AND 90 PERCENT IN UNPAVED AREAS.
5. IT SHALL BE THE CONTRACTOR'S RESPONSIBILITY TO ENSURE THAT TRENCH COMPACTION TESTS BE PROVIDED AT POINTS 1 FOOT ABOVE THE PIPE AND AT 1 FOOT VERTICAL INTERVALS TO FINISH GRADE, AT A MINIMUM SPACING OF EVERY 300 FEET, AND TO FURNISH COPIES OF TEST REPORTS PROMPTLY TO THE CITY ENGINEERING DEPARTMENT.
6. METALLIZED PIPE LOCATION TAPE SHALL BE LOCATED 15 INCHES BELOW FINISHED GRADE OR AS SPECIFIED BY MANUFACTURER FOR ALL PVC LINES. MARKER TAPE SHALL BE USED ON ALL DUCTILE IRON PIPE.
7. WATER SERVICES (SINGLE 1") SHALL BE POLYETHYLENE TUBING (BLUE IN COLOR) ; POLYBUTYLENE SHALL NOT BE ALLOWED.
8. ALL WATER SERVICE ENDINGS SHALL BE MARKED WITH 4" X 4" LUMBER (PRESSURE TREATED) EXTENDING 4 FEET ABOVE GRADE, WITH WATER SERVICES SECURED 24" ABOVE THE GROUND. WIRE TIES SHALL BE USED TO SECURE THE CURB STOPS TO SUPPORT POSTS.
9. WATER VALVES SHALL BE PLACED AT ALL STREET INTERSECTIONS AND AT MAXIMUM SPACINGS OF 500 FEET.
10. AT ALL WATER MAIN TEES AND CROSSES, VALVES SHALL BE INSTALLED ON ALL LEGS EXCEPT ONE.
11. APPROVED WATER VALVE TYPES ARE THE FOLLOWING:
    A. STANDARD GATE VALVES LESS THAN 48" DIAMETER RESILIENT SEAT GATE VALVES (AWWA C–509 OR C–515).
    B. TAPPING VALVES AND MECHANICAL TAPPING SLEEVE SHALL BE STAINLESS STEEL. (AWWA C – 509)
12. ALL WATER VALVE BOXES SHALL BE ADJUSTED TO FINISH GRADE AND THE LIDS PAINTED BLUE TO MAKE THEM PLAINLY VISIBLE.
13. WATER VALVES SHALL BE COMPLETELY OPENED BY THE CONTRACTOR UPON FINAL ACCEPTANCE OF NEW WATER SYSTEMS IN THE PRESENCE OF UTILITY DEPARTMENT PERSONNEL.
14. HYDRANTS SHALL BE PLACED AT 500 FEET MAXIMUM SPACINGS IN RESIDENTAL DEVELOPMENTS AND AT 300 FEET MAXIMUM SPACINGS IN BUSINESS AND INDUSTRIAL DEVELOPMENTS. ALL WATER MAIN TO WHICH HYDRANTS ARE CONNECTED SHALL BE 8 INCHES MINIMUM.
15. ALL FIRE HYDRANTS SHALL BE CONSTRUCTED TO MAKE THEM EASILY ACCESSIBLE TO FIRE PERSONNEL IN CASE OF FIRE. THE MAIN NOZZLE CONNECTION SHOULD ALWAYS FACE THE STREET AND BE 18–24" ABOVE GRADE.
16. AS STANDARD PRACTICE, WATER MAINS SHALL BE INSTALLED 4 FEET OFF THE BACK OF CURB OR AS APPROVED BY THE CITY.
17. ALL WATER MAINS SHALL BE NSF–APPROVED FOR POTABLE WATER USE, AND SHALL HAVE A MINIMUM COVER OF 36 INCHES. IN SPECIAL CASES WHERE IT IS IMPOSSIBLE OR INAPPROPRIATE TO PROVIDE ADEQUATE COVER, DUCTILE IRON CLASS 350 OR CONCRETE ENCASEMENT MAY BE USED AS APPROVED BY THE CITY.
18. ALL PROPOSED WATER MAINS SHALL BE FLUSHED, CLEANED WITH A POLY PIG, DISINFECTED AND BACTERIOLOGICALLY CLEARED FOR SERVICE IN ACCORDANCE WITH LATEST AWWA STANDARDS AND THE FLORIDA DEPARTMENT OF ENVIRONMENTAL PROTECTION REQUIREMENTS.
19. WATER MAINS SHALL BE AWWA C–900 CL 150, OR D.I.P. CLASS 350 STANDARD CEMENT LINED.
20. UPON CONSTRUCTION COMPLETION AND ACCEPTANCE OF THE SYSTEM, IT SHALL BE THE DESIGN ENGINEER'S RESPONSIBILITY TO ENSURE THAT THE SYSTEM IS PROPERLY CERTIFIED AND ACCEPTED BY THE HEALTH DEPARTMENT, AND THAT CERTIFIED AS–BUILT DRAWINGS ARE PROVIDED TO THE CITY PRIOR TO PAVING AND ANY USE OF THE SYSTEM. PROVIDE THREE (3) BLUELINE COPIES AND ONE (1) MYLAR OF AS–BUILT DRAWINGS.
21. MEGALUG OR EQUIVALENT, RESTRAINED JOINT SYSTEM MAY BE USED ON ALL RESTRAINED FITTINGS, VALVES, ETC. MINIMUM DEPTH OF BURY ON PIPES NOT MEETING REQUIRED COVER REQUIREMENTS SHALL FOLLOW THE MOST RECENT DIPRA THRUST RESTRAINT DESIGN GUIDELINES.
22. WATER SYSTEMS SHALL BE PRESSURE TESTED AT 150 PSI STATIC PRESSURE FOR A PERIOD OF 2 HOURS PER AWWA STANDARDS. TESTS SHALL BE CONDUCTED BEFORE FINAL PAVING AND IN THE PRESENCE OF THE CITY'S INSPECTOR.
23. ALL WATER SERVICES SHALL BE MARKED WITH A "Λ" SAWCUT INTO THE CURB OR BY METAL TABS SET INTO THE PAVEMENT.
24. ALL WATER VALVES AND BLOW–OFFS SHALL BE MARKED WITH AN "X" SAWCUT INTO THE CURB OR BY METAL TABS SET INTO THE PAVEMENT. LOCATION OF METAL TABS IN INCHES FROM EDGE OF PAVEMENT SHALL EQUAL DISTANCE IN FEET FROM EDGE OF PAVEMENT TO VALVE.
25. UNIFLANGE 1300 SERIES PIPE RESTRAINTS AS MANUFACTURED BY FORD OR APPROVED EQUAL MAY BE USED AS APPROPRIATE FOR RESTRAINING IN–LINE PRESSURE PIPE EACH SIDE OF PIPE JOINT. AS REQUIRED BY RESTRAINT TABLE.
26. TRACING WIRE SHALL BE INSTALLED IN ACCORDANCE WITH UTILITY PIPE LOCATION MATERIALS DETAIL.
27. NO GALVANIZED PIPE, FITTINGS, ETC. ARE ACCEPTED.
28. ALL WATER METERS SHALL BE INSTALLED AT THE RIGHT OF WAY LINE ONLY REGARDLESS OF SIZE.
29. SUBMIT ASSEMBLY CERTIFICATION FOR ALL BACKFLOW PREVENTERS TO THE CITY'S ENGINEERING DEPARTMENT BEFORE FINAL INSPECTION.
30. PIPING FOR RAW WATER SHALL BE OLIVE GREEN FOR ABOVE GROUND PIPING, BUIRED PVC PIPING SHALL BE BLUE WITH WHITE COLOR BACKGROUND LOCATOR TAPE PLACED DIRECTLY ON TOP OF THE PIPE AND AT 12" TO 18" ABOVE THE PIPE. THE TAPE SHALL CONTINUOUSLY READ "CAUTION – RAW WATER MAIN BURIED BELOW" OR WHITE WITH LOCATOR TAPE PLACED 12" TO 18" ABOVE THE TOP OF THE PIPE.
31. SEE CHART BELOW FOR WATERMAIN SIZE AND MATERIALS.

M A T E R I A L S		
DIAMETER	MATERIAL	STANDARD
2" – 4"	PVC 1120 / SDR 21	ASTM D 2241
> 4" – 12"	PVC 1120 / CLASS 150	AWWA C 900
> 4" – 12" DEDICATED FIRE LINE	PVC 1120 / CLASS 150	AWWA C 900
14" – 36" (16"– 24" —— DR – 18) (30"– 36" —— DR – 21)	PVC 1120	AWWA C 905
ALL SIZES	HDPE DIPS DR 11	ASTM F 714

NOTE: PVC PIPE COLOR SHALL BE BLUE FOR POTABLE WATER MAINS, BLUE WITH WHITE LOCATOR TAPE OR WHITE WHITE LOCATOR TAPE FOR RAW WATER MAIN.

VALVE SCHEDULE FORD OR EQUIVALENT	
WATER SERVICES	
VALVES AT MAIN	
1"	F1000–4
1 1/2"	B81–666 (REQ. C84–66 PACK JOINT COUPLING)
2"	B81–777 (REQ. C84–77 PACK JOINT COUPLING)
VALVES AT METER	
1"	B94–324W
1 1/2"–2"	BF43–777W
REUSE SERVICES	
VALVES AT MAIN AND R/W LINE	
1"	BRW41–444W
2"	BRW41–777W

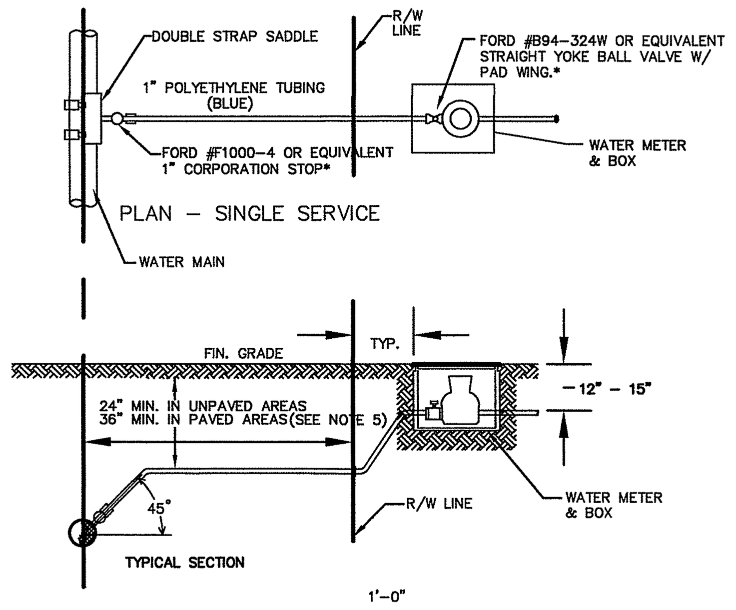

NOTES:
1. PE TUBING SHALL BE 200 PSI, NSF APPROVED, SDR 9, MEETING ASTM D1248. TUBING SHALL BE ENDOT ENDOPURE OR APPROVED EQUAL.
2. REDUCED PRESSURE BACKFLOW PREVENTERS ARE REQUIRED FOR ALL COMMERCIAL SERVICES. TO BE INSTALLED BY A CERTIFIED TECHNICIAN AT OWNERS EXPENSE
3. ALL SERVICE TAPS SHALL BE NO CLOSER THAN 2'–0" STAGGERED INTERVAL OR WITHIN 2'–0" OF BELL OR SPIGOT ENDS.
4. METERS 3" AND LARGER SHALL BE PLACED IN A VAULT TO BE CONSTRUCTED BY DEVELOPER IN ACCORDANCE WITH ARTICLE 4.04B4 LDC.
5. IN AREAS TO BE PAVED PROVIDE A 2" MIN. PVC SCHEDULE 40 SLEEVE FOR PE–TUBING. SLEEVE SHALL EXTEND A MIN. OF 2' BEHIND BACK OF CURB AT EACH SIDE OF ROAD.
6. ALL IRRIGATION SERVICES (WATER) MUST HAVE AN APPROVED BACKFLOW PREVENTION DEVICE INSTALLED ON CUSTOMERS SIDE OF WATER METER. THE CUSTOMER IS RESPONSIBLE FOR INSTALLATION AND CERTIFICATION COST. A COPY OF THE CERTIFICATION MUST BE SENT TO THE CITY OF ORMOND BEACH ENGINEERING DEPARTMENT, PRIOR TO FINAL INSPECTION
7. WATER METERS INSTALLED IN AREAS SERVED BY RECLAIMED WATER OR AN ALTERNATE IRRIGATION SUPPLY SHALL BE EQUIPT WITH DUAL CHECK BACKFLOW PREVENTERS.
8. WATER METERS SHALL BE RADIO READ.

WATER LATERAL SERVICE
5/8", 3/4", 1", 1–1/2", 2" METERS

NTS

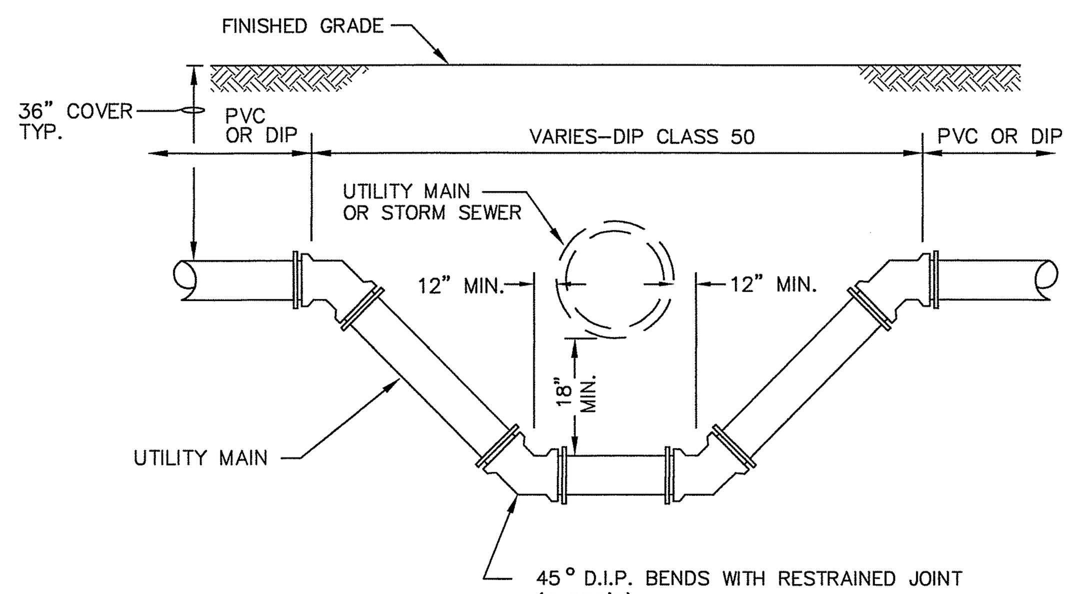

NOTE: ABOVE DETAIL TO BE UTILIZED IF CONTRACTOR CANNOT MAINTAIN 18" CLEAR BETWEEN MAINS BY DEFLECTING PIPE IN ACCORDANCE WITH MANUFACTURER'S RECOMMENDATIONS.

PIPE CROSSING

NTS.

ACCEPTABLE MANUFACTURERS: HERSEY MODEL 6CM, WILKINS MODEL 375, WATTS MODEL 009 WITH OS&Y VALVES,

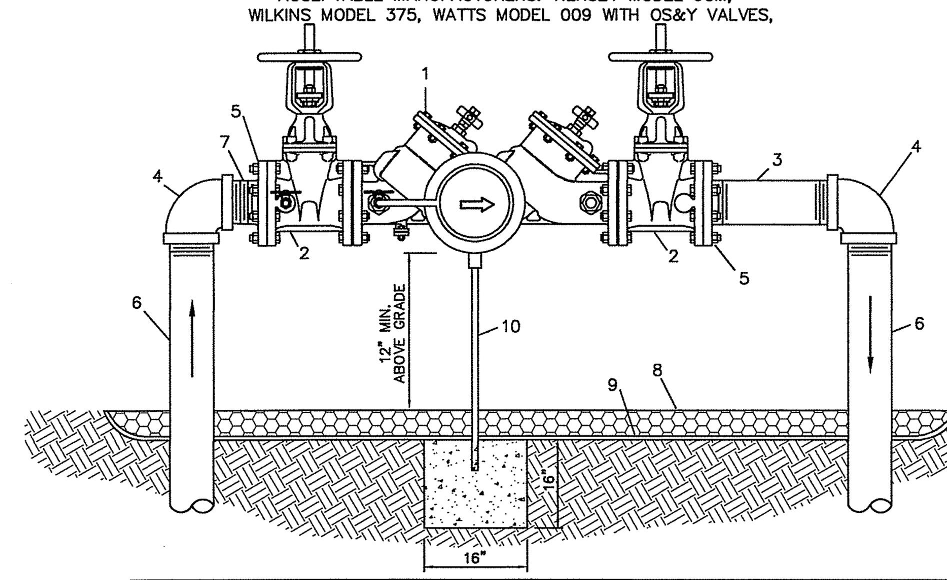

M A T E R I A L S		
ITEM	QUANT.	D E S C R I P T I O N
1	1	3", 4" VALVE, REDUCED PRESSURE BACKFLOW PREVENTER
2	2	3", 4" VALVE, GATE, C.I., F–F
3	1	3", 4" NIPPLE, PVC., D.I., BRASS, OR COPPER (12" LONG) (OPT.)
4	2	3", 4" ELBOW, PVC., D.I., BRASS, OR COPPER – 90°
5	2	3", 4" FLANGE
6	2	3", 4" PIPE, PVC, D.I., BRASS OR COPPER (42" LONG)
7	1	3", 4" NIPPLE, PVC., D.I., BRASS OR COPPER (6" LONG)
8	*	PEA GRAVEL
9	*	PLASTIC LINER
10	1	PIPE SUPPORT / CONCRETE FOUNDATION

NOTE: –FIELD ADJUST AND CUT ITEM 3 TO THE PROPER LENGTH.
–ASSEMBLY SHALL BE PAINTED FOREST GREEN.
–A COPY OF THE ASSEMBLY CERTIFICATION SHALL BE SUBMITTED TO THE CITY'S ENGINEERING DEPARTMENT BEFORE FINAL INSPECTION
–ASSEMBLY SHOULD HAVE ADEQUATE LANDSCAPING AROUND IT TO OBSCURE VIEW.

C–900 OR D.I. PIPE AND FITTINGS SHALL BE RESTRAINED. COPPER PIPE AND FITTINGS SHALL BE SWEATED. BRASS PIPE AND FITTINGS SHALL BE THREADED. NO GALVANIZED PIPE OR FITTINGS ALLOWED.

REDUCED PRESSURE BACKFLOW PREVENTER
(POTABLE WATER) 3" OR 4"

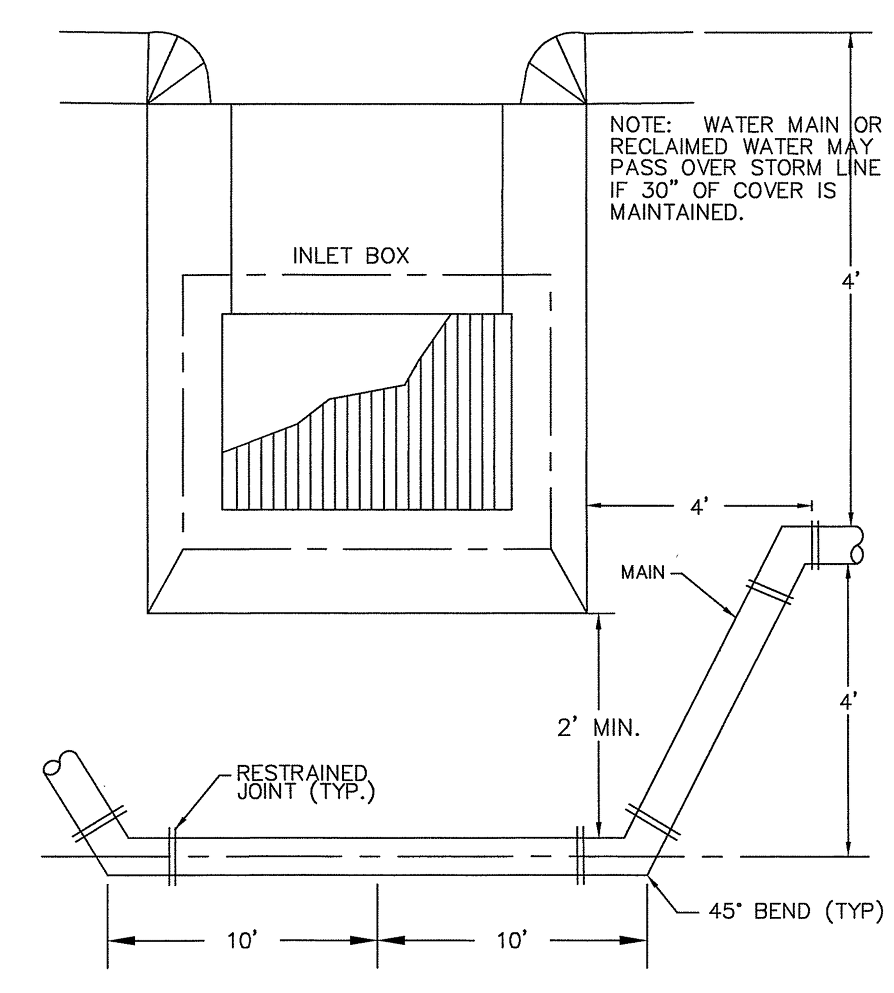

PLAN VIEW

CITY OF ORMOND BEACH FLORIDA	STANDARD CONSTRUCTION DETAIL WATER MAIN INSTALLATION BETWEEN DRAINAGE INLET AND SIDEWALK NTS	INDEX W–7 JAN 2012

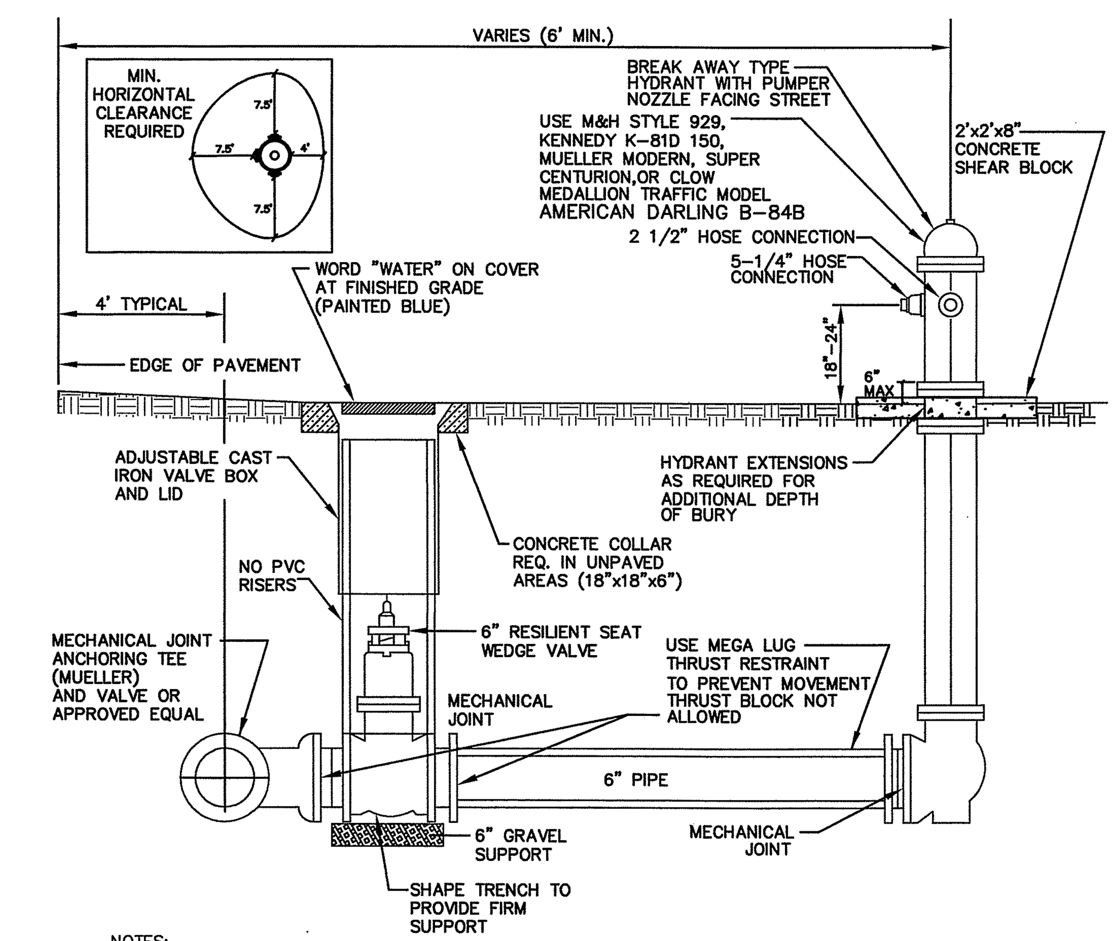

NOTES:
1. ALL JOINTS SHALL BE RESTRAINED
2. HYDRANTS TO BE PAINTED SAFETY YELLOW (PUBLIC) OR RED (PRIVATE) BONNET COLOR.
3. HYDRANT BONNET AND CAP TO BE PAINTED ACCORDING TO THE FOLLOWING SCHEME:
   CLASS AA – 1500 GPM AND GREATER – LIGHT BLUE
   CLASS A – 1000 GPM TO 1499 GPM – GREEN
   CLASS B – 500 GPM TO 999 GPM – ORANGE
   CLASS C – LESS THAN 500 GPM – RED
4. HYDRANTS INSTALLED ON THE PENINSULA SHALL BE PAINTED WITH A CATALYZED TWO PART PRIMER (DURAPLATE #235) OR EPOXY BATH SOLUTION, ELECTRICALLY CHARGED AND A CATALYZED URETHANE TOP COAT (ACROLON 218), OR TWO COMPONENT POLYURETHANE PAINT.
5. HOSE CONNECTIONS TO BE AMERICAN STANDARD THREADS.
6. THE HYDRANT SHOE WILL BE COATED INSIDE WITH FUSION BONDED EPOXY. 6 MIL MINIMUM
7. ADJUSTMENTS OR REPAIRS TO THE HYDRANT AFTER INSTALLATION SHALL BE DONE BY AN UNDERGROUND UTILITY CONTRACTOR OR THE CITY AND ALL COST SHALL BE CHARGED TO THE DEVELOPER. PAYMENT SHALL BE MADE PRIOR TO CERTIFICATE OF OCCUPANCY OF PROPERTY.
8. RESTRAINED JOINTS REQUIRED. THRUST BLOCKS NOT PERMITTED.
9. BOLTS SHALL BE 316 STAINLESS STEEL.
10. INSTALL BLUE REFLECTIVE MARKER IN SUCH A MANNER THAT THE REFLECTIVE FACE OF THE MARKER IS PERPENDICULAR TO A LINE PARALLEL TO THE ROADWAY CENTERLINE. THE BLUE REFLECTIVE MARKERS SHALL BE PLACED IN THE CENTER OF THE TRAVEL LANE, DIRECTLY ACROSS FROM AND ADJACENT TO EACH FIRE HYDRANT.

FIRE HYDRANT ASSEMBLY

NTS

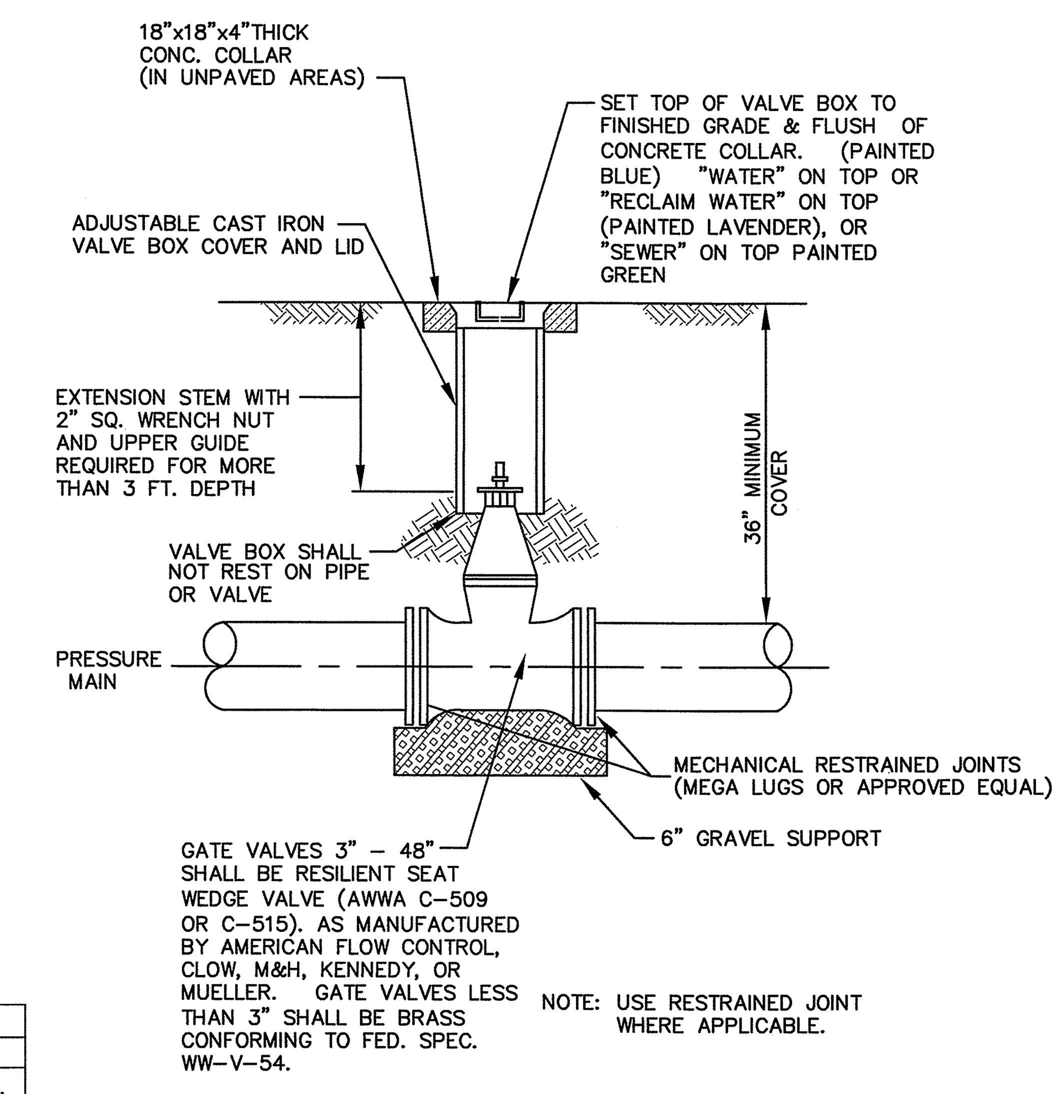

NOTE: USE RESTRAINED JOINT WHERE APPLICABLE.

GATE VALVE AND VALVE BOX

NTS.

	SCHEDULE OF LENGTHS OF RESTRAINED DIP/PVC (FT.)									
	FITTING	90° BEND	45° BEND	22.5° BEND	11.25° BEND	TEE OR DEAD END	REDUCER			
	PIPE SIZE (IN.) :						TO 4"	TO 6"	TO 8"	TO 10"
DIP	4"	24	18	18	18	43	—	—	—	—
	6"	34	18	18	18	61	31	—	—	—
	8"	44	19	18	18	79	57	33	—	—
	10"	53	22	18	18	95	77	58	32	—
	12"	62	26	18	18	111	97	81	59	33
PVC	4"	31	18	18	18	67	—	—	—	—
	6"	43	18	18	18	94	49	—	—	—
	8"	55	23	18	18	124	89	52	—	—
	10"	66	27	18	18	148	121	91	50	—
	12"	77	32	18	18	175	152	127	93	52

LENGTHS BETWEEN HEAVY LINES INDICATE ONE FULL LENGTH (18' MIN.) OF PIPE TO BE RESTRAINED.

TABLE SHOWS MINIMUM LENGTH OF PIPE EACH WAY FROM FITTING FOR WHICH RESTRAINT IS REQUIRED.

TABLE APPLIES TO DUCTILE IRON PIPE FOR THE FOLLOWING CONDITIONS:
TEST PRESSURE: 200 PSIG
SOIL TYPE: SP
COVER DEPTH: 3 FEET (MIN.)
SAFETY FACTOR: 2.0
TRENCH TYPE: 3

RESTRAINED JOINT TABLE

NO.	DATE	DESCRIPTION	BY
REVISIONS			

PARKER MYNCHENBERG & ASSOCIATES, INC.
PROFESSIONAL ENGINEERS * LANDSCAPE ARCHITECTS
1729 RIDGEWOOD AVENUE HOLLY HILL, FLORIDA 32117
(386)677–6891 FAX(386)677–2114 E–MAIL: info@parkermynchenberg.com
CERTIFICATE OF AUTHORIZATION NUMBER: 00003910

WATER SYSTEM DETAILS

ORMOND RENAISSANCE CONDOMINIUM
ORMOND BEACH * FLORIDA

FILE NO. 13–49WD.DWG	DESIGNER: P.MYNCHENBERG	SEAL
DATE: 12.12.13	CADD TECH: C.HARNDEN	
SCALE: NONE	SHEET 45 OF 48	

X:\Bruce Work\Bruce Work\RENAISSANCE\RENAISSANCE\13–49WD.dwg, 2/13/2014 1:47:52 PM, HP Designjet T1100 44in HPGL2.pc3, Arch D (landscape), 1:1

ACCEPTABLE MANUFACTURERS: HERSEY MODEL 6CM,
WILKINS MODEL 350ADA, WATTS MODEL 009 OS&Y,

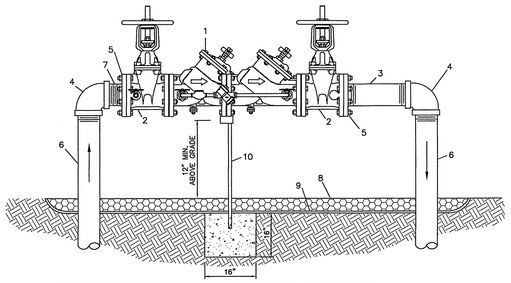

M A T E R I A L S		
ITEM	QUANT.	D E S C R I P T I O N
1	1	4", 6", 8", 10" VALVE, DOUBLE CHECK BACKFLOW PREVENTER
2	2	4", 6", 8", 10" VALVE, GATE, C.I., F-F
3	1	4", 6", 8", 10" NIPPLE, PVC., BRASS, OR D.I., (12" LONG) (OPT.)
4	2	4", 6", 8", 10" ELBOW, PVC., BRASS, OR D.I., – 90°
5	2	4", 6", 8", 10" FLANGE, STEEL PIPE, SCREW-TYPE
6	2	4", 6", 8", 10" PIPE, PVC., BRASS, OR D.I. (42" LONG)
7	1	4", 6", 8", 10" NIPPLE, PVC., BRASS, OR D.I. (6" LONG)
8	*	PEA GRAVEL
9	*	PLASTIC LINER
10	1	PIPE SUPPORT / CONCRETE FOUNDATION

NOTE: –FIELD ADJUST AND CUT ITEM 6 TO THE PROPER LENGTH.
–NO GALVANIZED FITTINGS OR PIPE ALLOWED.
–A COPY OF THE ASSEMBLY CERTIFICATION SHALL BE SUBMITTED TO THE CITY'S ENGINEERING DEPARTMENT BEFORE FINAL INSPECTION.
–ASSEMBLY SHOULD HAVE ADEQUATE LANDSCAPING AROUND IT TO OBSCURE VIEW.
–ASSEMBLY SHALL BE PAINTED FOREST GREEN.

STANDARD CONSTRUCTION DETAIL
DOUBLE CHECK DETECTOR BACKFLOW PREVENTER (DEDICATED FIRE LINE) 4", 6", 8", 10"
NTS

INDEX W–6E
JAN 2012

ACCEPTABLE MANUFACTURERS: HERSEY MODEL FRP II,
WILKINS MODEL 975XL, WATTS MODEL 009 QTS

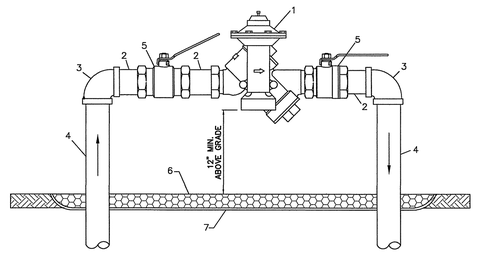

M A T E R I A L S		
ITEM	QUANT.	D E S C R I P T I O N
1	1	3/4", 1", 1–1/2" OR 2" BACKFLOW PREVENTER ASSEMBLY
2	3	3/4", 1", 1–1/2" OR 2" x NOM. NIPPLES – BRASS
3	2	3/4", 1", 1–1/2" OR 2" x 90° ELBOWS – PVC., BRASS, OR COPPER
4	2	3/4", 1", 1–1/2" OR 2" x VARIES RISER – PVC., BRASS, OR COPPER
5	2	3/4", 1", 1–1/2" OR 2" BALL VALVE
6	*	PEA GRAVEL
7	*	PLASTIC LINER

NOTE: –FIELD ADJUST AND CUT ITEM 4 TO THE PROPER LENGTH.
–NO GALVANIZED FITTINGS OR PIPE ALLOWED.
–A COPY OF THE ASSEMBLY CERTIFICATION SHALL BE SUBMITTED TO THE CITY'S ENGINEERING DEPARTMENT BEFORE FINAL INSPECTION.
–ASSEMBLY SHOULD HAVE ADEQUATE LANDSCAPING AROUND IT TO OBSCURE VIEW.
–ASSEMBLY SHALL BE PAINTED FOREST GREEN

STANDARD CONSTRUCTION DETAIL
REDUCED PRESSURE BACKFLOW PREVENTER (POTABLE WATER & IRRIGATION) 3/4", 1", 1 1/2", OR 2"
NTS

INDEX W–6D
JAN. 2012

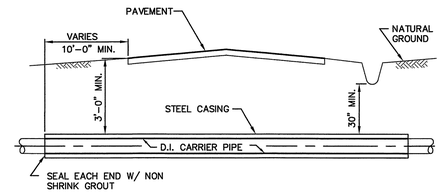

NOTE: BORING & JACKING TO BE IN ACCORDANCE W/ FLA. D.O.T. SPECs.

NOTES
1. MINIMUM COVER FOR TOP OF CASING ON ALL CITY STREETS SHALL BE 3.0'
2. ROTATION OF CARRIER PIPE INSIDE THE CASING PIPE WILL NOT BE PERMITTED. RESTRAINED MECHANICAL OR FLANGED JOINT PIPE SHALL BE USED TO HELP PREVENT SUCH ROTATION.
3. THE CONTRACTOR SHALL SUBMIT SHOP DRAWINGS OF CASING AND CARRIER PIPE INSTALLATION FOR APPROVAL PRIOR TO FABRICATION OF PIPING, CASING, AND APPURTENANCES. CERTIFICATION OF CASING PIPE IS REQUIRED.
4. GROUTING OF SPACE BETWEEN CASING AND CARRIER PIPE NOT REQUIRED UNLESS NEGATIVE FLOTATION EXISTS.
5. WELDING OF CASING PIPE TO BE DONE BY CERTIFIED WELDER. ALL ENDS OF CASING PIPE SHALL BE CHAMFERED PRIOR TO ANY WELDING.
6. SEAL END OF CASING PIPE WITH CONCRETE.
7. CITY INSPECTOR SHALL BE PRESENT THROUGHOUT ALL BORE AND JACK ACTIVITIES.

NOTE TO ENGINEER
CROSSING DETAIL SHALL BE TO SIZE AND SCALE. SHOW ALL EXISTING UTILITIES, CLEARANCES, CARRIER AND CASING SIZE AND LENGTH, LOCATION OF PAVED ROAD, LIMITS OF RIGHT OF WAY, EXISTING AND PROPOSED SPOT ELEVATIONS AND PROPOSED PIPE INVERT ELEVATIONS.

STANDARD CONSTRUCTION DETAIL
BORE AND JACK
NTS

INDEX M–8A
JAN 2012

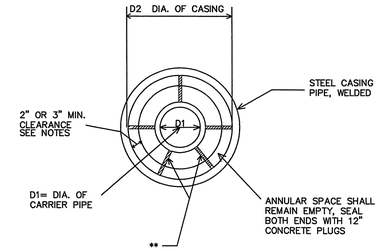

1. THE CONTRACTOR SHALL SUBMIT SHOP DRAWINGS OF CASING INSTALLATION TO ENGINEER FOR REVIEW PRIOR TO INSTALLATION
2. SEAL BOTH ENDS OF CASING W/ 12" GROUT (MINIMUM)
3. ROTATION OF CARRIER PIPE INSIDE THE CASING WILL NOT BE PERMITTED
4. THE CARRIER PIPE MUST BE IN THE CENTERED AND RESTRAINED POSITION WITHIN THE CASING.

CARRIER PIPE AND CASING PIPE SIZES (MIN.)													
CARRIER PIPE NOM. DIA. (D1)	4	6	8	10	12	14	16	18	20	24	30	36	42	48
CASING PIPE NOM. DIA. (D2)	14	16	18	22	24	30	30	30	36	36	48	54	60	66
WALL THICKNESS–INCHES *	PER AUTHORITY HAVING JURISDICTION													

* WITHIN CITY OF ORMOND BEACH RIGHT OF WAY, USE CURRENT FDOT STANDARDS.

** SPECIALLY DESIGNED SPACERS SHALL BE USED IN ACCORDANCE WITH MANUFACTURER'S SPECIFICATIONS. USE CASCADE CASING SPACERS OR PRE–APPROVED EQUAL.

STANDARD CONSTRUCTION DETAIL
BORE AND JACK
NTS

INDEX M–8B
JAN 2012

NO.	DATE	DESCRIPTION	BY

REVISIONS

PARKER MYNCHENBERG & ASSOCIATES, INC.
PROFESSIONAL ENGINEERS * LANDSCAPE ARCHITECTS
1729 RIDGEWOOD AVENUE HOLLY HILL, FLORIDA 32117
(386)677–6891 FAX(386)677–2114 E–MAIL: info@parkermynchenberg.com
CERTIFICATE OF AUTHORIZATION NUMBER: 00003910

WATER SYSTEM DETAILS

ORMOND RENAISSANCE CONDOMINIUM
ORMOND BEACH * FLORIDA

FILE NO. 13–49WD.DWG	DESIGNER: P.MYNCHENBERG
DATE: 12.12.13	CADD TECH: C.HARNDEN
SCALE: NONE	SHEET 46 OF 48

SEAL

X:\Bruce Work\Bruce Work\RENAISSANCE\RENAISSANCE15-49WD.dwg 2/13/2014 1:48:11 PM, HP Designjet T770D 44in HPGL2 v5, Arch D (landscape), 1:1

SANITARY SEWER CONSTRUCTION GENERAL NOTES

1. THE CITY'S PUBLIC UTILITY DEPARTMENT SHALL BE NOTIFIED PRIOR TO BEGINNING ANY SEWER CONSTRUCTION.
2. ALL SANITARY SEWER MAIN LINES SHALL BE A MINIMUM OF 8" IN DIAMETER. SERVICE LATERALS SHALL BE A MINIMUM OF 4" DIAMETER (RESIDENTIAL) OR A MINIMUM OF 6" DIAMETER (COMMERCIAL)
3. ALL SANITARY SEWER LINES SHALL BE PVC SDR 26. IN PLACES WHERE A MINIMUM COVER OF 4.0' CANNOT BE MAINTAINED, C-900 GREEN PVC DR-25, CLASS 100 OR CONCRETE ENCASEMENT SHALL BE USED.
4. MINIMUM ALLOWABLE SANITARY SEWER SLOPES ALLOWED ARE:
   8" PIPE 0.40%
   10" PIPE 0.30%
   12" PIPE 0.22%
5. SEWER LINE CONSTRUCTION SHALL BE ACCOMPLISHED BY THE USE OF A LASER INSTRUMENT UNLESS ANOTHER METHOD IS PREVIOUSLY APPROVED BY THE CITY.
6. THE CONTRACTOR SHALL AT ALL TIMES, DURING PIPE LAYING, DEWATER THE GROUND SUFFICIENTLY TO KEEP THE GROUNDWATER ELEVATION A MINIMUM OF 6" BELOW THE PIPE BEING LAID WITHIN THE AREA OF THE TRENCH.
7. ALL PIPES SHALL BE LAID ON A FIRM FOUNDATION. SOFT OR SPONGY BEDDING FOR PIPES WILL NOT BE ACCEPTED. ANY UNSUITABLE MATERIAL SHALL BE REMOVED AND REPLACED WITH A DRY, COMPACTED, GRANULAR MATERIAL SATISFACTORY TO THE CITY.
8. EXCAVATION AND BACKFILL: THE CONTRACTOR SHALL PROVIDE ADEQUATE SHEETING AND BRACING OF EXCAVATION WORK OR USE OF TRENCH BOX IN ORDER TO PROVIDE FOR THE SAFETY OF WORKMEN, AS WELL AS REPRESENTATIVES OF THE CITY, THE DESIGN ENGINEER, AND THE DEVELOPER.
9. THE CONTRACTOR SHALL INSTALL A METALLIZED FOIL LOCATER TAPE, OR SIMILAR DEVICE AS MAY BE APPROVED BY THE CITY FOR THE FULL LENGTH OF ALL PVC WATER, RECLAIMED WATER AND SEWAGE FORCE MAINS. THIS PIPE LOCATER AID SHALL BE INSTALLED (15) INCHES BELOW FINISHED GRADE OR AS DIRECTED BY THE MANUFACTURER AND IS IN ADDITION TO THE LOCATER WIRE REQUIRED IN THE UTILITY PIPE LOCATION MATERIALS DETAIL (MISCELLANEOUS DETAILS SECTION – M10).
10. MANHOLES SHALL BE LOCATED AT INTERVALS NOT EXCEEDING 400 FEET.
11. MANHOLE RIMS SHALL MATCH FLUSH WITH THE FINISH GRADE ELEVATION IN PAVED AREAS AND A MINIMUM OF 0.2 FEET ABOVE GRADE IN UNPAVED AREAS.
12. THE CONTRACTOR SHALL CONSTRUCT SANITARY SEWER MANHOLES IN SUCH A WAY THAT SEWER LINES DO NOT INTERSECT SEALED JOINTS BETWEEN SECTIONS OF THE MANHOLE.
13. RUBBER BOOTS AND STAINLESS STEEL BANDS SHALL BE UTILIZED IN THE CONNECTION OF THE SEWER MAIN TO THE MANHOLES (SEE RUBBER BOOT AND PRECAST JOINT CONNECTION DETAIL).
14. NO DOGHOUSE TYPE MANHOLES ARE PERMITTED WITHIN THE CITY OF ORMOND BEACH
15. INDIVIDUAL SANITARY SERVICE CONNECTORS ON NEW CONSTRUCTION SHALL NOT BE CONNECTED DIRECTLY INTO MANHOLES, BUT TO SEWER MAIN LINES BY USE OF WYE CONNECTIONS.
16. FOR SINGLE FAMILY HOMES, SINGLE FOUR INCH SEWER SERVICES SHALL BE CONSTRUCTED AT EACH LOT OR UNIT AND LOCATED ON THE DOWNSTREAM SIDE OF THE LOT CENTER LINE. THESE SERVICES SHALL BE EXTENDED 4 FEET ABOVE GROUND AT THE PROPERTY LINE WITH A PVC RISER AND PLUG BEING EASILY VISIBLE FROM THE ROAD. RUBBER SEAL FITTINGS TO BE USED ON ALL LINES, NO GLUED JOINTS.
17. FOR MULTI-FAMILY AND COMMERCIAL SITES, SIX INCH MINIMUM SEWER SERVICES AND CLEANOUTS SHALL BE PROVIDED AS APPROVED BY THE CITY.
18. SANITARY SEWER LATERALS LONGER THAN 70 FEET, MEASURED FROM THE SEWER MAIN TO THE RIGHT-OF-WAY LINE MAY BE APPROVED ON A CASE BY CASE BASIS. SUCH LATERALS SHALL BE D.I.P. EPOXY LINED OR C-900 PVC.
19. SANITARY SEWER MANHOLES WHICH HAVE SEWER FORCE MAINS DISCHARGING DIRECTLY INTO THEM, OR ANY MANHOLE WITHIN 200 FEET OF A LIFT STATION, SHALL BE FIBERGLASS OR PVC LINED. RETRO-FITTING OF MANHOLES WITH LINERS SHALL BE REQUIRED WHEN NEW CONNECTIONS SUCH AS THIS ARE MADE. FIBERGLASS SHALL BE A MINIMUM 1/2" THICKNESS UNLESS APPROVED OTHERWISE BY THE CITY. LINING SHALL BE AGRU SURE-GRIP OR PRE-APPROVED EQUAL.
20. SEE CHART ON DETAIL INDEX S-1C FOR FORCEMAIN AND REUSE PIPE SIZE AND MATERIALS.
21. THE CITY OF ORMOND BEACH REQUIRES THE DEVELOPER TO TELEVISE ANY AND ALL SANITARY SEWER MAIN LINES AND LATERALS PRIOR TO ANY FINAL ACCEPTANCE, AND RESERVES THE RIGHT TO REQUEST WATER AND AIR TESTING.
22. ALL SEWER MAINS PRIOR TO ACCEPTANCE BY THE CITY SHALL BE TELEVISED BY A REPUTABLE COMPANY THAT ENGAGES IN THIS TYPE OF WORK. THE VIDEO SHALL BE NON-STOP WITH AUDIO DESCRIBING WHAT IS BEING REVIEWED. WRITTEN VIDEO LOGS DESCRIBING THE CONDITION OF THE LINES SHALL ACCOMPANY THE TAPE SUBMISSION TO THE CITY.
23. CONTRACTORS SHALL BE REQUIRED TO TELEVISE ALL SEWER LINES IN THE PRESENCE OF CITY PERSONEL AND PROVIDE COPIES OF THE VIDEO TAPE TO THE PUBLIC UTILITY DEPT. ANY DEFECTS NOTED SHALL BE CORRECTED PRIOR TO ACCEPTANCE BY THE CITY.
24. ALL MANHOLES CONSTRUCTED IN SIDE YARDS, BACKYARDS, AND EASEMENTS OFF THE RIGHT-OF-WAY SHALL BE OUTFITTED WITH FIBERGLASS LINERS OR OTHER TYPES OF LINERS OR COATINGS APPROVED BY THE CITY. IN ADDITION THE CITY MAY REQUIRE LINERS OR COATINGS TO BE INSTALLED IN OTHER AREAS WHERE THE PUBLIC UTILITY DEPARTMENTS BELIEVE THE NEED IS JUSTIFIED.
25. ALL SEWER LINES WHICH ARE CONSTRUCTED OFF PUBLIC RIGHTS-OF-WAY WITHIN SIDEYARDS, BACKYARDS, AND OTHER POORLY ACCESSABLE AREAS SHALL BE CONSTRUCTED OF C-900 PVC, OR EPOXY LINED DUCTILE IRON PIPE. ABSOLUTLEY NO USE OF PLASTIC STYRENE FITTINGS SHALL BE ALLOWED.
26. SEWER LATERAL LOCATIONS SHALL BE MARKED ALONG THE OUTSIDE OF THE CURB WITH A SAWCUT V, OR BY A METAL TAB SET INTO THE PAVEMENT.
27. EZ-WRAP PLASTIC, AS MANUFACTURED BY PRESS-SEAL GASKET CORPORATION OR APPROVED EQUAL, SHALL BE USED ON THE OUTSIDE OF ALL MANHOLE AND WETWELL JOINTS. APPLY ONE LAYER OF 9" WRAP CENTERED ON EACH JOINT. A CITY INSPECTOR SHALL PERSONALLY INSPECT ALL JOINT SEALS PRIOR TO BACKFILLING OPERATIONS .
28. ALL PROPOSED SEWER MAINS, 4" OR GREATER, SHALL BE FLUSHED AND CLEANED WITH A POLY PIG IN ACCORDANCE WITH LATEST AWWA STANDARDS AND THE FLORIDA DEPARTMENT OF ENVIRONMENTAL PROTECTION REQUIREMENTS.
29. ALL SEWER MAINS SHALL HAVE A MINIMUM COVER OF 36 INCHES. IN SPECIAL CASES WHERE IT IS IMPOSSIBLE OR INAPPROPRIATE TO PROVIDE ADEQUATE COVER. DUCTILE IRON CLASS 350 OR CONCRETE ENCASEMENT MAY BE USED AS APPROVED BY THE CITY.
30. SEWER SYSTEMS SHALL BE PRESSURE TESTED AT 100 PSI STATIC PRESSURE FOR A PERIOD OF 2 HOURS PER AWWA STANDARDS. TESTS SHALL BE CONDUCTED BEFORE FINAL PAVING AND IN THE PRESENCE OF THE CITY'S INSPECTOR.

FORCE MAIN & REUSE MAIN STANDARDS		
DIAMETER	MATERIAL	STANDARD
2" – 4"	PVC 1120 / SDR 21	ASTM D 2241
> 4" – 12"	PVC 1120 / CLASS 100	AWWA C 900
14" – 36" (16"– 24" —— DR – 18) (30"– 36" —— DR – 21)	PVC 1120	AWWA C 905
ALL SIZES	HDPE (DIPS) DR 13.5	ASTM F 714

NOTE: PVC PIPE COLOR SHALL BE GREEN OR WHITE FOR SEWER FORCE MAIN, AND PURPLE FOR REUSE MAIN.

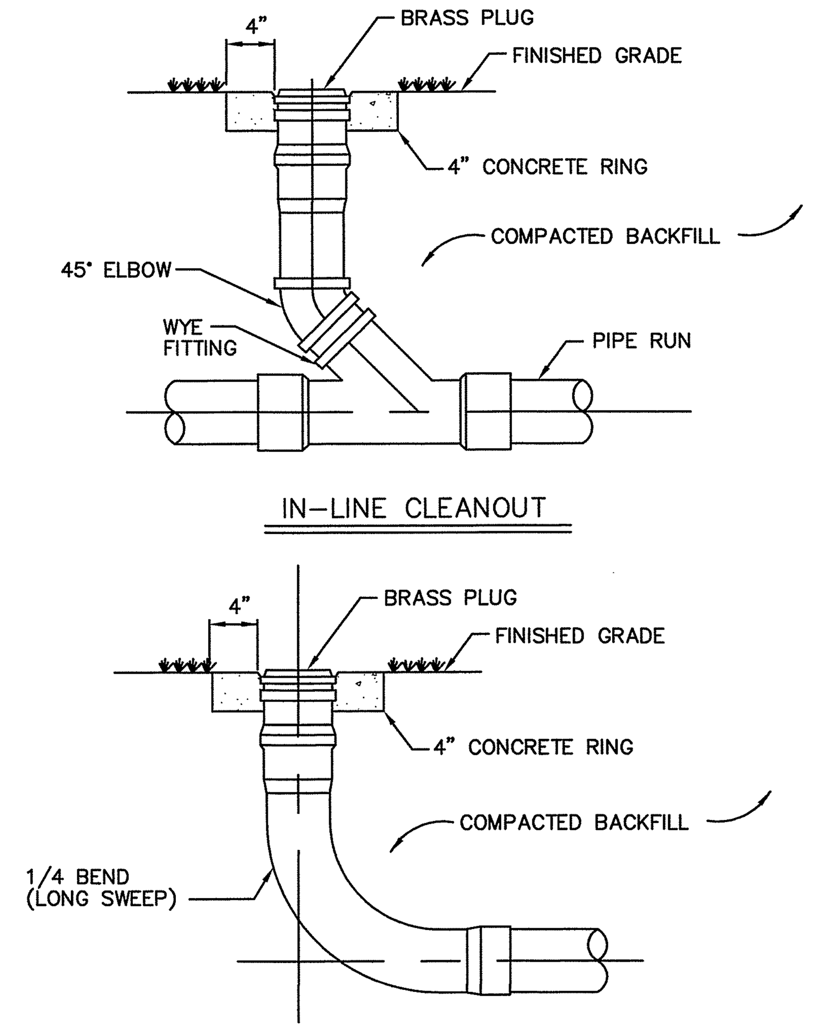

IN-LINE CLEANOUT

TERMINAL CLEANOUT

NOTE: CONCRETE COLLAR REQUIRED IN UNPAVED AREAS

CLEANOUT DETAIL

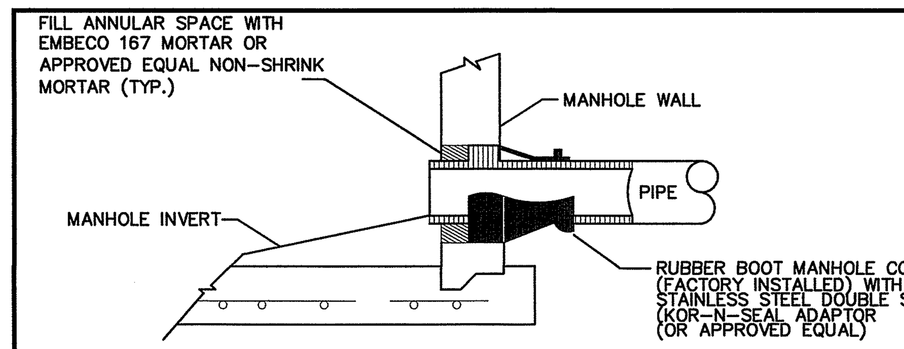

MANHOLE PIPE CONNECTION

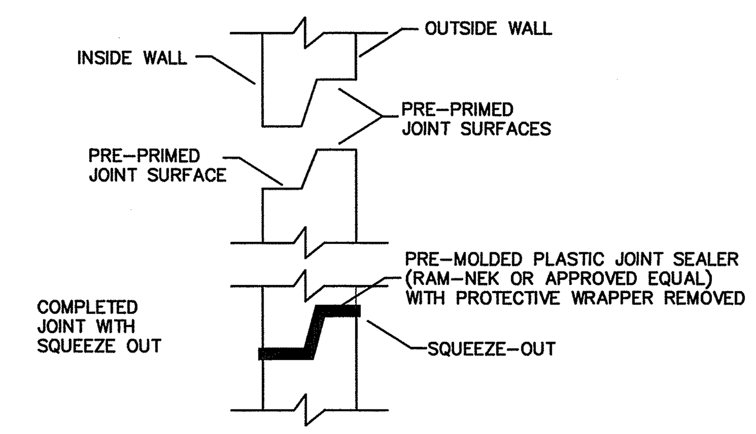

NOTE: ALL CONNECTIONS TO EXISTING SANITARY SEWER MANHOLES SHALL UTILIZE A CORING METHOD AND THE IN-FIELD INSTALLATION OF A RUBBER BOOT INTO THE MANHOLE AND THEN SECURED WITH A STAINLESS STEEL DOUBLE STRAP.

PRECAST JOINT CONNECTION

STANDARD CONSTRUCTION DETAIL	INDEX
RUBBER BOOT AND PRECAST JOINT CONNECTION DETAIL NTS.	S-5 JAN 2012

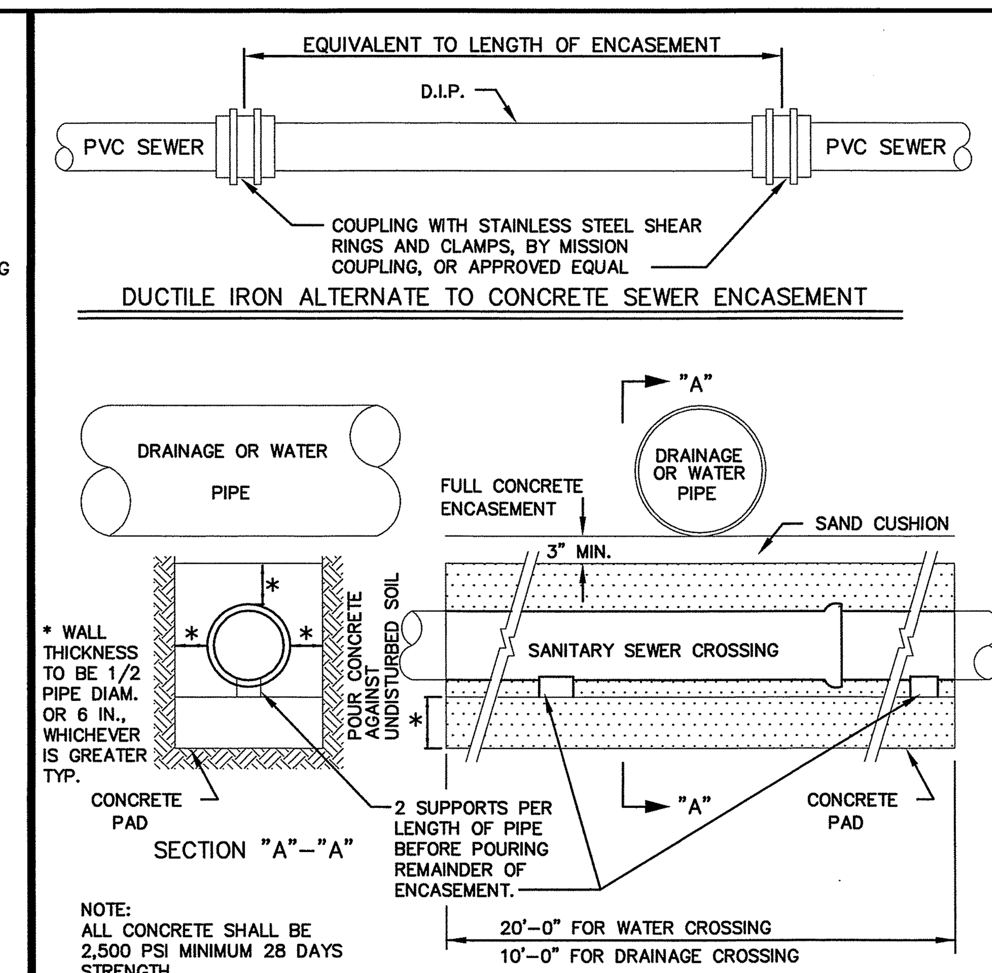

WATER MAIN SHALL BE LOCATED ABOVE ENCASEMENT AS SHOWN ON PLANS OR DETERMINED IN THE FIELD, USE ENCASEMENT WHERE VERTICAL CLEARENCE BETWEEN WATER MAIN AND SEWER IS LESS THAN 18 INCHES.

STANDARD CONSTRUCTION DETAIL	INDEX
SANITARY SEWER CROSSING NTS.	S-8 JAN 2012

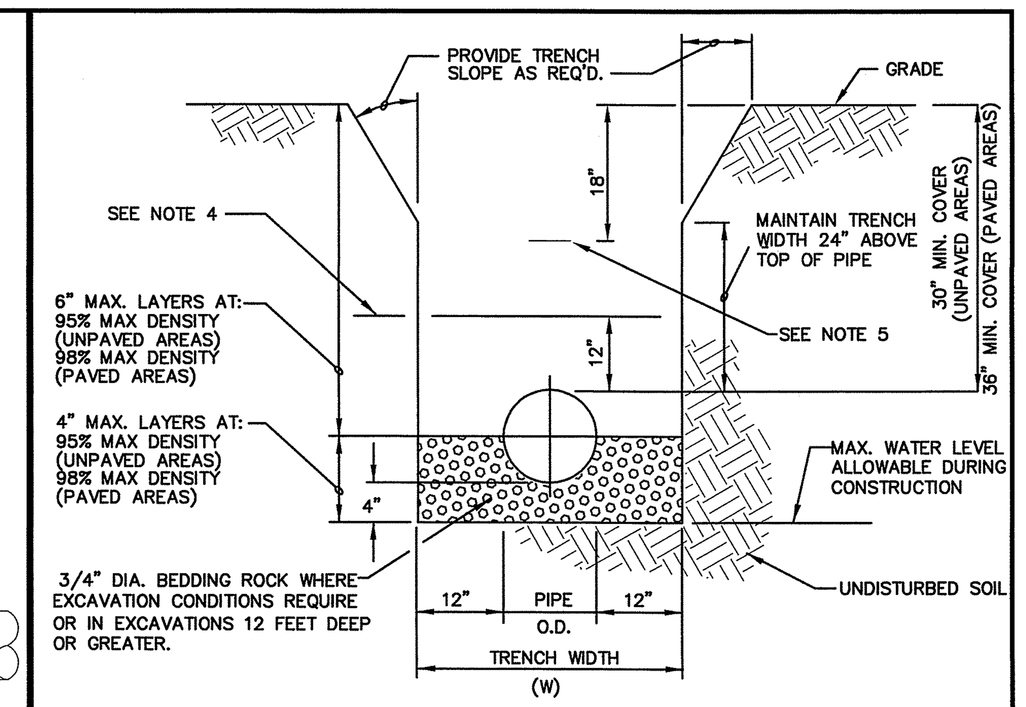

PIPE INSTALLATION DETAIL

NOTES:
1. WHERE SOIL CONDITIONS CAN NOT BE MAINTAINED AS SHOWN ABOVE, PROVIDE APPROVED METHOD OF CONSTRUCTION.
2. SHEETING WILL BE REQUIRED AS DETERMINED IN THE FIELD.
3. COMPACTION PERCENTAGES SHOWN REFER TO A.A.S.H.T.O. T-180. PROVIDE COPIES OF CERTIFIED TEST REPORTS TO CITY INSPECTOR.
4. MECHANICAL COMPACTION NOT ALLOWED BELOW THIS LEVEL.
5. INSTALL METALLIC TAPE OVER FULL LENGTH OF PIPE.

STANDARD CONSTRUCTION DETAIL	INDEX
PIPE INSTALLATION NTS	M-9 JAN 2012

4" OR 6" SINGLE SERVICE – PLAN

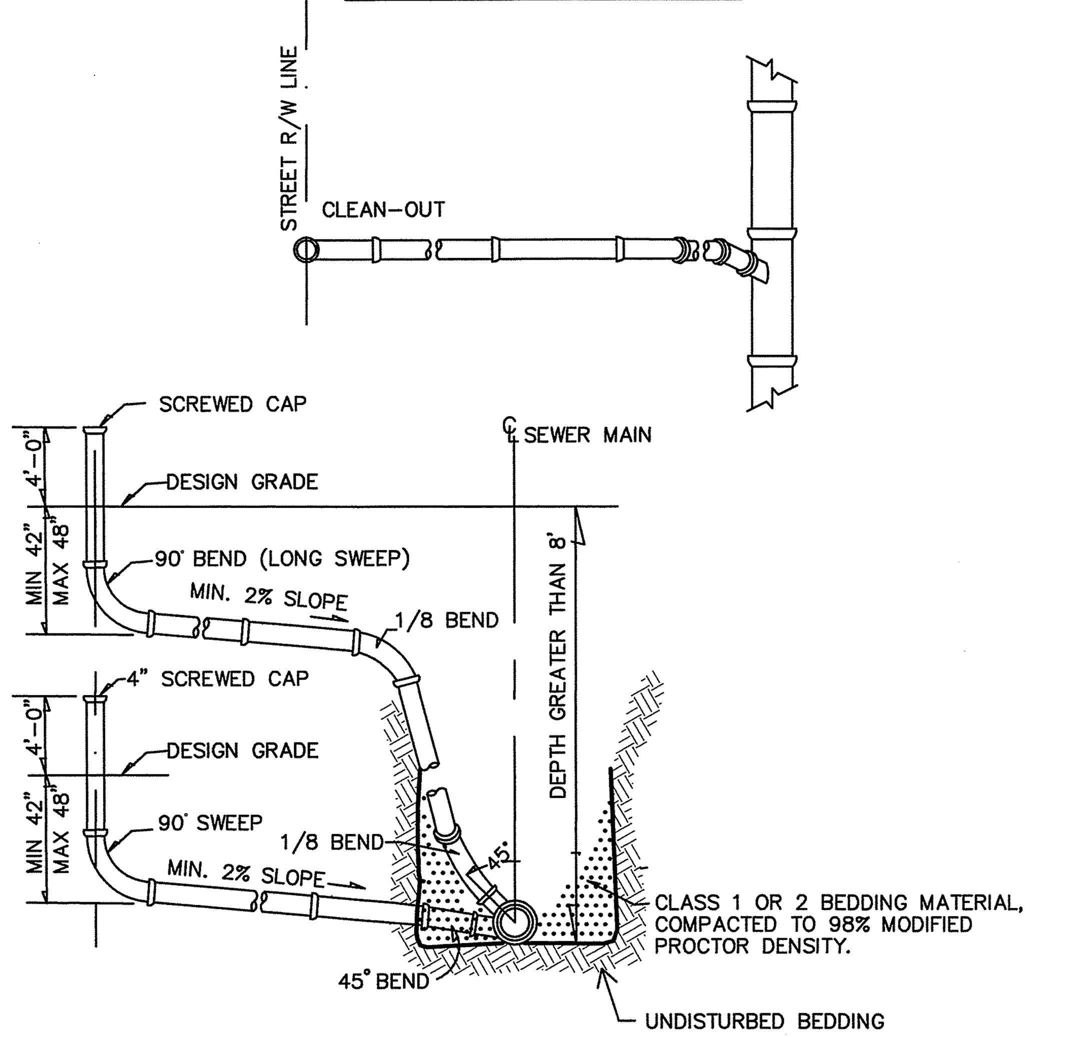

4" – 6" SINGLE SERVICE – ELEVATION

SEWER LATERAL

NOTE: USE OF STYRENE MATERIAL WILL NOT BE PERMITTED.

NOTE
SINGLE SERVICES SHALL BE MIN:
4" DIA. RESIDENTIAL
6" DIA. COMMERCIAL

ALL JOINTS TO BE RUBBER GASKET (NO GLUED FITTINGS)

SEWER LATERAL DETAIL

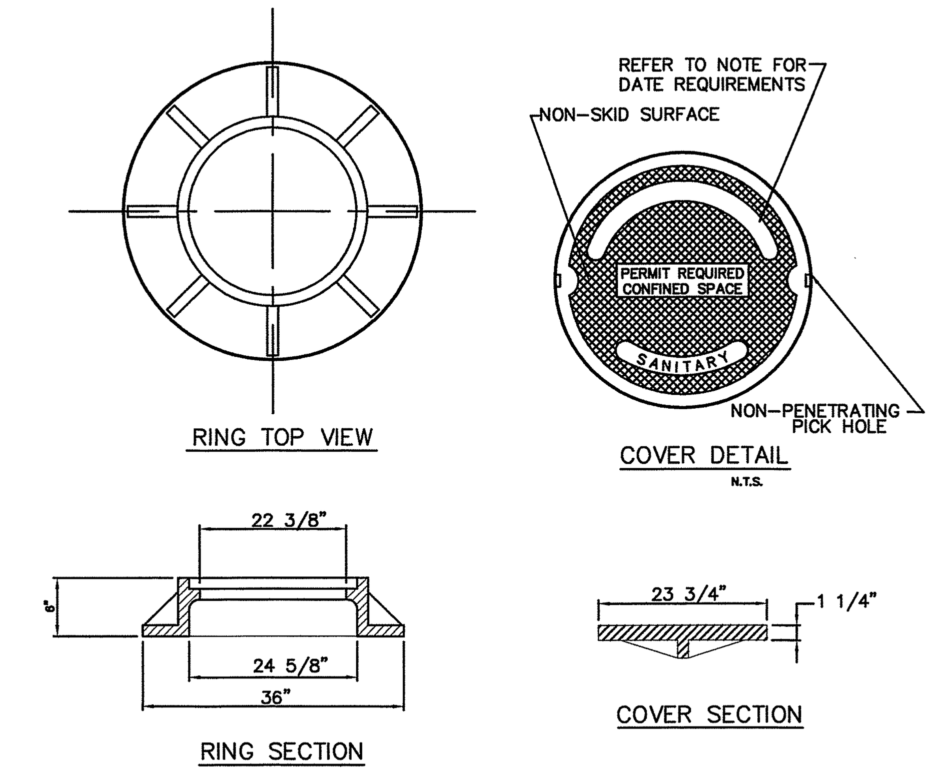

NOTE: MANHOLE RING AND COVER SHALL CONFORM TO FDOT STANDARD INDEX 201, SHEET 1 OF 6, AS SHOWN IN ROADWAY TRAFFIC DESIGN STANDARDS.

NOTE: YEAR STAMP TO MATCH CASTING YEAR

U. S. FOUNDRY 195E-ORS ("O" RING SEAL) OR APPROVED EQUAL

COVER TYPE	LOAD RATING	COVER WEIGHT	TOTAL WEIGHT
BJ	HEAVY DUTY	200	350

FOR MANHOLES IN FL. D.O.T. R/W OR AS DETERMINED BY THE CITY. THE COVER TYPE SHALL BE – BJ HEAVY DUTY 200 LBS W/ ORS.

STANDARD CONSTRUCTION DETAIL	INDEX
MANHOLE RING AND COVER DETAIL NTS.	S-9B JAN 2012

NO.	DATE	DESCRIPTION	BY
		REVISIONS	

PARKER MYNCHENBERG & ASSOCIATES, INC.
PROFESSIONAL ENGINEERS * LANDSCAPE ARCHITECTS
1729 RIDGEWOOD AVENUE HOLLY HILL, FLORIDA 32117
(386)677-6891 FAX(386)677-2114 E-MAIL: info@parkermynchenberg.com
CERTIFICATE OF AUTHORIZATION NUMBER: 00003910

SEWER SYSTEM DETAILS

ORMOND RENAISSANCE CONDOMINIUM
ORMOND BEACH * FLORIDA

FILE NO. 13-49SD.DWG	DESIGNER: P.MYNCHENBERG
DATE: 12.12.13	CADD TECH: C.HARNDEN
SCALE: NONE	SHEET 47 OF 48

SEAL

X:\Bruce Work\Bruce Work\RENAISSANCE\RENAISSANCE\13-49SD.dwg, 2/13/2014 1:49:30 PM, HP Designjet T1100 44in HPGL2.pc3, Arch D (landscape), 1:1

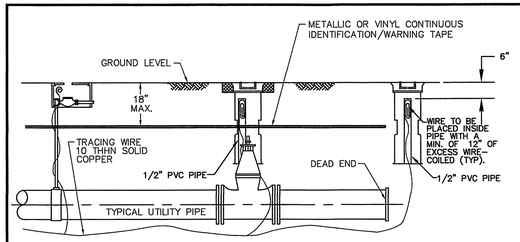

ALL PVC PIPE, OR OTHER CITY APPROVED NONMETALLIC PIPE INSTALLED WITHIN THE CITY'S WATER, SANITARY SEWER, OR RECLAIMED WATER SYSTEMS, SHALL BE INSTALLED WITH 10 THHN SOLID COPPER TRACING WIRE. IF PIPE IS INSTALLED BY DIRECTIONAL BORE, USE (2) 10 THHN SOLID COPPER TRACING WIRE.

THE TRACING WIRE MUST BE INSTALLED DIRECTLY BELOW THE PIPE AND BROUGHT TO THE SURFACE AT 500' MINIMUM INTERVALS. WIRE SHALL EXTEND A MINIMUM OF 12" ABOVE GRADE AT EACH INTERVAL AND BE COILED AND PLACED IN A VALVE BOX, METER BOX, MANHOLE, CLEANOUT OR OTHER APPLICABLE STRUCTURE.

TRACING WIRE BETWEEN INTERVALS SHALL BE INSTALLED SO AS TO PROVIDE CONTINUOUS CURRENT WHEN LINE LOCATION EQUIPMENT IS CONNECTED TO THE TRACING WIRE. WIRE BRANCHING FROM MAIN LINES SHALL BE LINKED BY A CITY APPROVED CONNECTOR SUCH AS KING # 2011 SAFETY SEALED CONNECTORS OR APPROVED EQUAL.

COLOR CODING:

POTABLE WATER SYSTEM:	BLUE
RECLAIMED WATER SYSTEM:	LAVENDER
SANITARY SEWER FORCE MAIN SYSTEM:	GREEN

1. POTABLE WATER AND RECLAIMED WATER SYSTEMS: WIRE SHALL BE INSTALLED BELOW ALL MAINS AND SERVICE LINES AND ATTACHED TO VALVES, HYDRANTS AND FITTINGS. WIRE INSTALLED WITH SERVICE LINES SHALL CONNECT TO THE WIRE INSTALLED BELOW THE MAIN AND EXTEND TO THE CURB STOP.
2. FIRE SPRINKLER LINES: WIRE SHALL CONNECT TO THE WIRE INSTALLED BELOW THE MAIN AND EXTEND TO THE RISER CONNECTION.
3. SANITARY SEWER FORCE MAINS: WIRE SHALL BE INSTALLED BELOW THE FORCE MAIN AND ATTACHED TO ALL VALVES AND FITTINGS AND BROUGHT TO THE SURFACE AND PLACED IN A METAL, CITY APPROVED, VALVE BOX.
4. DEAD END MAINS: WIRE SHALL BE PLACED IN A PROPERLY IDENTIFIED METAL VALVE BOX AT THE END OF THE RUN.
5. WIRE SHALL NOT BE FASTENED OR COILED TO VALVE OPERATING NUT.

STANDARD CONSTRUCTION DETAIL UTILITY PIPE LOCATION MATERIALS NTS	INDEX M-10 JAN. 2012

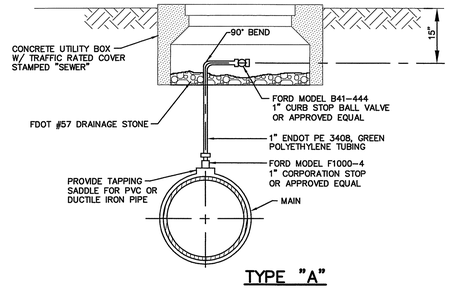

TYPE "A"

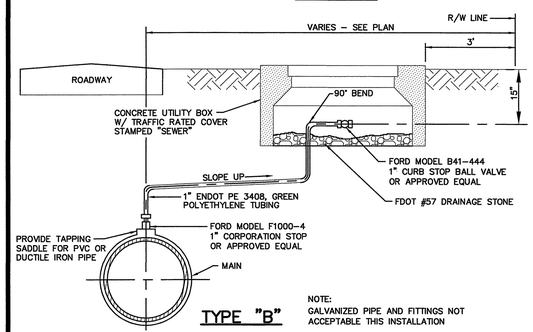

TYPE "B"

NOTE:
GALVANIZED PIPE AND FITTINGS NOT ACCEPTABLE THIS INSTALLATION

STANDARD CONSTRUCTION DETAIL MANUAL AIR RELEASE VALVE NTS	INDEX S-10A JAN 2012

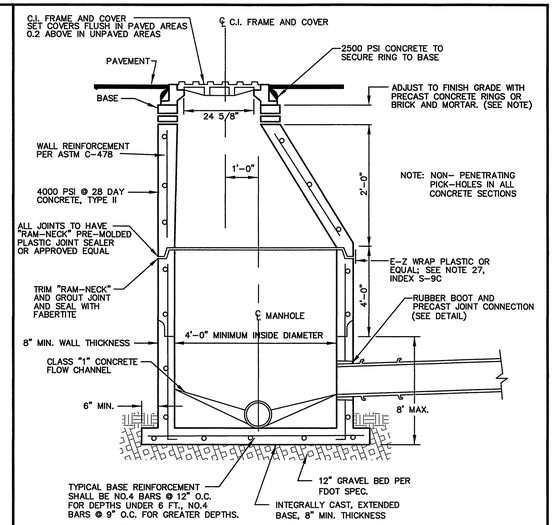

NOTES:
1. THE TOP OF THE CONE SHOULD BE SET 2 1/2" MIN. – 12" MAX. BELOW THE BOTTOM OF THE MANHOLE COVER FRAME TO ACCOMODATE FUTURE GRADE CHANGES (USE BRICK AND MORTAR OR PRECAST CONCRETE RINGS).
2. THE INSIDE OR OUTSIDE OF MANHOLES SHALL NOT BE COATED, EXCEPT MANHOLES WHICH RECEIVE DISCHARGE FROM A FORCE MAIN AND ANY MANHOLES LOCATED WITHIN 200' OF A LIFT STATION OR ANY MANHOLES OUTSIDE OF THE RIGHT-OF-WAY. A SULFIDE CORROSION-RESISTANT MATERIAL SHALL BE USED AS LINER FOR THOSE MANHOLES THAT MEET THE CONDITIONS STATED ABOVE. THE LINER SHALL BE EITHER FIBERGLASS OR PVC OR AS APPROVED BY THE CITY ENGINEER.
3. NO DOGHOUSE TYPE MANHOLES SHALL BE PERMITTED WITHIN THE CITY OF ORMOND BEACH.

STANDARD CONSTRUCTION DETAIL TYPE "A" PRECAST MANHOLE NTS	INDEX S-9A JAN 2012

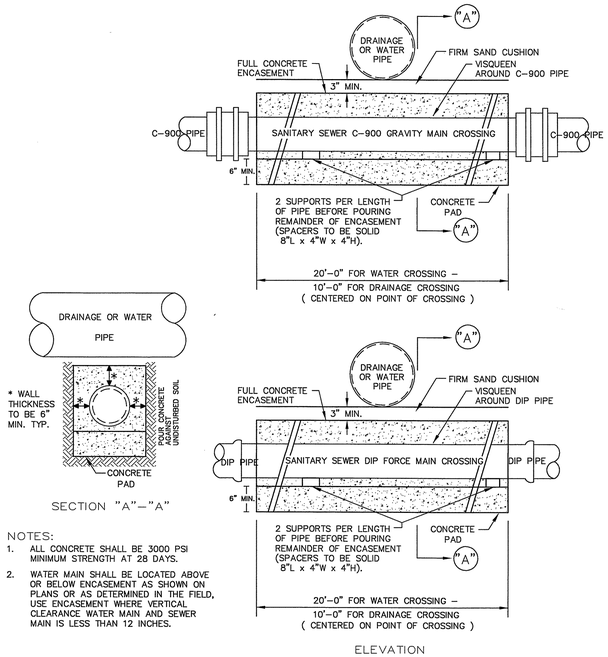

NOTES:
1. ALL CONCRETE SHALL BE 3000 PSI MINIMUM STRENGTH AT 28 DAYS.
2. WATER MAIN SHALL BE LOCATED ABOVE OR BELOW ENCASEMENT AS SHOWN ON PLANS OR AS DETERMINED IN THE FIELD, USE ENCASEMENT WHERE VERTICAL CLEARANCE WATER MAIN AND SEWER MAIN IS LESS THAN 12 INCHES.

SANITARY SEWER
CONCRETE ENCASEMENT
NTS

NO.	DATE	DESCRIPTION	BY

REVISIONS

PARKER MYNCHENBERG & ASSOCIATES, INC.
PROFESSIONAL ENGINEERS * LANDSCAPE ARCHITECTS
1729 RIDGEWOOD AVENUE HOLLY HILL, FLORIDA 32117
(386)677-6891 FAX(386)677-2114 E-MAIL: info@parkermynchenberg.com
CERTIFICATE OF AUTHORIZATION NUMBER: 00003910

SEWER SYSTEM DETAILS

ORMOND RENAISSANCE CONDOMINIUM
ORMOND BEACH * FLORIDA

FILE NO. 13-49SD.DWG	DESIGNER: P.MYNCHENBERG	
DATE: 12.12.13	CADD TECH: C.HARNDEN	
SCALE: NONE	SHEET 48 OF 48	SEAL