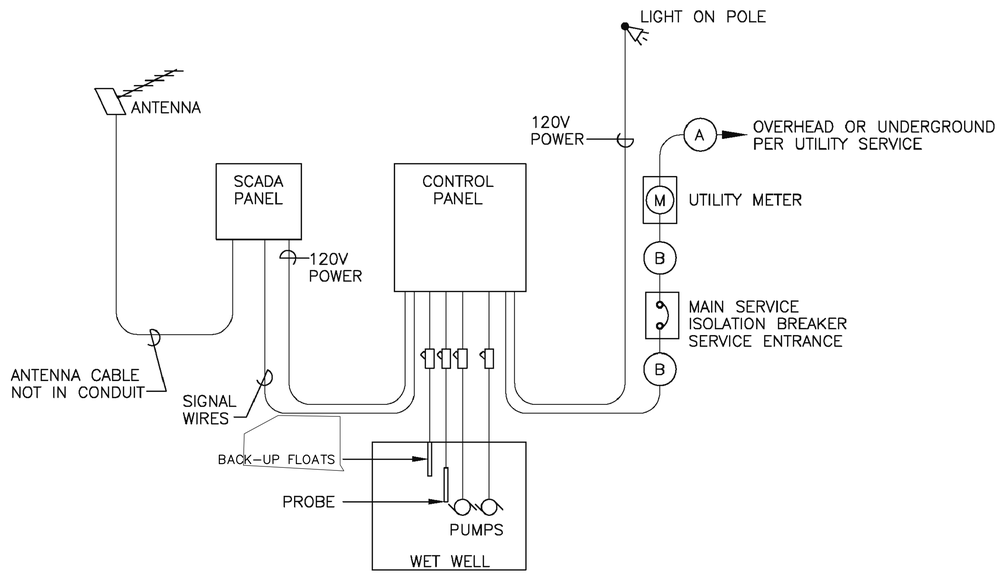

EQUIPMENT RISER DIAGRAM

NOT TO SCALE

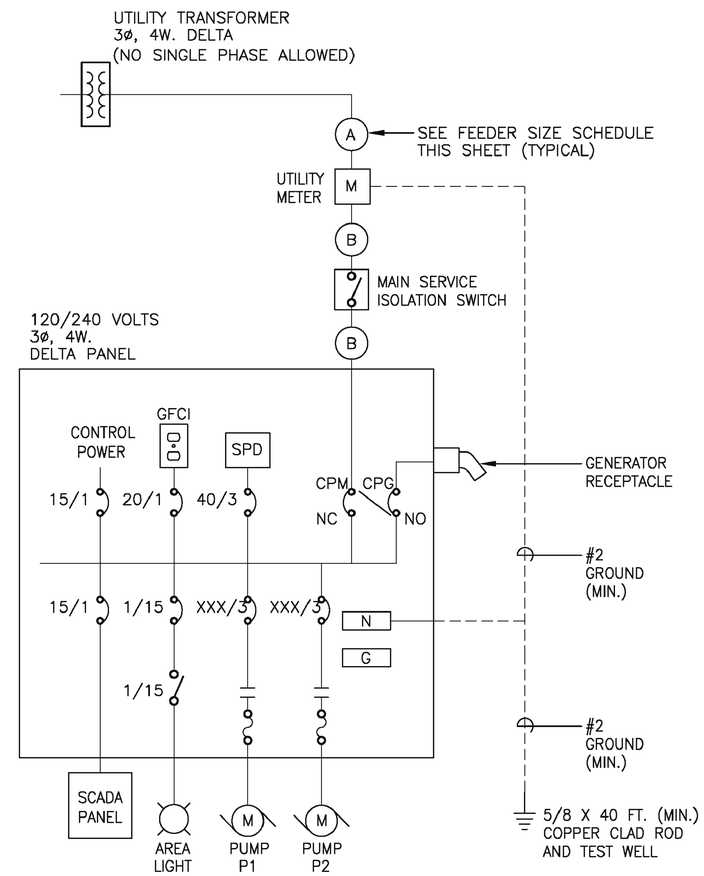

TYPICAL POWER ONE-LINE DIAGRAM

NOT TO SCALE

XX–SEE CIRCUIT BREAKER TRIP SCHEDULE.

CIRCUIT BREAKER TRIP SCHEDULE

	PUMP HORSEPOWER DUPLEX PUMP SYSTEM	5	7.5	10	15	20
	AMPS @ 230 VOLTS (EACH PUMP)	15.2	22	28	42	54
MOTOR CIRCUIT PROTECTORS	PUMP BREAKER P1 CB	30	40	50	100	100
	PUMP BREAKER P2 CB	30	40	50	100	100
	SERVICE ISOLATION SWITCH	125	125	125	200	200
	PANEL MAIN & GEN. BREAKER CPM & CPG	125	125	125	150	200
	GENERATOR RECEPTACLE	100	100	200	200	200

GENERATOR RECEPTACLE:
100A, 600VAC, 3 POLE, 4 WIRE, WITH SPRING DOOR; CROUSE–HINDS #AR1042 WITH AJA6 ANGLE ADAPTER OR APPROVED EQUAL.
200A, 600VAC, 3 POLE, 4 WIRE, WITH SPRING DOOR; CROUSE–HINDS #2042 WITH AJA1 ANGLE ADAPTER OR APPROVED EQUAL.

FEEDER SCHEDULE

SYMBOL	DUPLEX PUMP HP	CONDUIT	CONDUCTOR
A	5 – 10	PER FPL	3 #1 & 1 #1 NEUTRAL
B	5 – 10	1–1/2"	3 #1 & 1 #1 NEUTRAL
A	15 – 20	PER FPL	3 #3/0 & 1 #3/0 NEUTRAL
B	15 – 20	2"	3 #3/0 & 1 #3/0 NEUTRAL

SEWAGE LIFT STATION DETAILS