DOLLAR GENERAL®

ORMOND BEACH, FL

1545 NORTH U.S. HWY 1

GRADE, DRAIN, BASE AND PAVE
WATER DISTRIBUTION
SEWAGE COLLECTION SYSTEM

FEBRUARY 2016

UTILITY INFORMATION

CONTRACTOR SHALL HAVE ALL EXISTING BURIED UTILITIES "LINE SPOTTED" BY CALLING "SUNSHINE 811" AND BY CONTACTING LOCAL UTILITY COMPANIES

	VOLUSIA COUNTY UTILITIES (386) 257-6000
WATER/SEWER:	CITY OF ORMOND BEACH PUBLIC WORKS DEPARTMENT 501 N ORCHARD STREET, ORMOND BEACH, FL 32174 OFFICE: (386) 676-3220 FAX: (386) 676-3294
ELECTRICAL:	FLORIDA POWER & LIGHT COMPANY JOHNIE WILSON johnie.wilson@fpl.com 5910 E HIGHWAY 100, PALM COAST, FL 32164 (386) 586-6424
GAS:	TECO PEOPLES GAS GEORGE SMITH 1722 RIDEWOOD AVE, HOLLY HILL, FL 32117 OFFICE: (386) 671-2232

SURVEYOR NOTES:

1. BEARINGS BASED (ASSUMED) ON THE NORTHERLY RIGHT OF WAY LINE OF OLD KINGS ROAD NORTH, SHOWN HEREON, BEING N50°01'05"W.
2. THIS SURVEY IS NOT VALID WITHOUT THE SIGNATURE AND THE ORIGINAL RAISED SEAL OF A FLORIDA LICENSED SURVEYOR/MAPPER (OR ELECTRONIC SIGNATURE ON DIGITAL FILE).
3. THERE MAY BE ADDITIONAL EASEMENTS, RESTRICTIONS AND/OR OTHER MATTERS NOT SHOWN ON THIS SURVEY WHICH MAY BE FOUND IN THE COUNTY PUBLIC RECORDS.
4. UNDERGROUND UTILITIES NOT LOCATED EXCEPT AS SHOWN PER FIELD LOCATION. SOME UTILITES MARKED "BY OTHERS", IN THIS CASE THE LOCATIONS ARE APPROXIMATE AND WERE OBTAINED FROM THE CITY OF ORMOND BEACH'S ENGINEERING DEPARTMENT.
5. UNDERGROUND FOUNDATIONS, IF ANY, NOT LOCATED.
6. PRIOR TO RELYING ON THE INFORMATION SHOWN FOR UNDERGROUND UTILITIES FOR THE PURPOSE OF CONNECTION OR EXTENSION, THE UTILITY MUST BE EXPOSED AND INFORMATION VERIFIED.
7. VERTICAL DATUM: NAVD 88 AS REFERENCED TO LOCAL NGS PUBLISHED BENCHMARKS
8. HORIZONTAL DATUM: NAD 83, FLORIDA STATE PLANE COORDINATE SYSTEM, EAST ZONE.
9. FLOOD ZONE: ZONE 'X' AND ZONE 'AH' WITH BASE FLOOD ELEVATION 30, NORTH AMERICAN VERTICAL DATUM 1988 (NAVD88). MAP NUMBER 12127C0184J, EFFECTIVE DATE FEBRUARY 19, 2014.
10. UTILITY STRUCTURE CONNECTIVITY SHOWN HEREON WITH ASSUMPTIONS BASED ON FIELD INSPECTION AND DOCUMENTS PROVIDED BY THE CITY OF ORMOND BEACH. UTILITY PIPING WAS NOT EXCAVATED DURING THE COURSE OF THIS SURVEY.
11. THE ACCURACY OF THE SURVEY DATA SHOWN HEREON MEETS THE COMMERCIAL/HIGH-RISH LINEAR 1 FOOT IN 10,000 FEET.
12. ZONING: B-7 (HIGHWAY TOURIST COMMERCIAL)
13. SETBACKS: FRONT/SIDE/REAR 20'; BUILDING HEIGHT RESTRICTION 50'.
14. PARKING REQUIREMENTS: IT IS THE OPINION OF THE UNDERSIGNED THAT THIS SITE IS TO BE "NONINTENSIVE RETAIL SALES"; THEREFORE, THE PARKING RATIO IS 1 SPACE PER 250 SQUARE FEET OF GROSS FLOOR AREA. (TO BE VERIFIED WITH THE CITY OF ORMOND BEACH, FL)
15. THE LEGAL DESCRIPTION AS SHOWN HEREON, AND AS PROVIDED BY OTHERS APPEARS TO BE LOCATED WITHIN LOTS 1-6 AND 15-20 WITHIN BLOCK 36, ALTHOUGH NOT SPECIFIED IN ANY DOCUMENTATION PROVIDED TO THE UNDERSIGNED.

UTILITY LOCATION NOTE

ALL UTILITIES MUST BE CONTACTED DIRECTLY IN ADDITION TO 811 CALL. NOTE THAT VOLUSIA COUNTY UTILITIES IS NOT INCLUDED IN THE 811 CALL AND MUST BE CONTACTED DIRECTLY TO BE ABLE TO PROVIDE A LOCATE SERVICE.

Sunshine 811
Always call 811 before you dig.

EXISTING UTILITIES DISCLAIMER:

EXISTING UTILITIES INDICATED ON THESE PLANS ARE BASED ON AVAILABLE INFORMATION. CONTRACTOR IS REQUIRED TO VERIFY LOCATION, BURY DEPTH, SIZE AND MATERIAL TYPE PRIOR TO ANY UTILITY IMPROVEMENTS. THE ENGINEER SHALL BE NOTIFIED IMMEDIATELY OF ANY DISCREPANCIES THAT ARE FOUND.

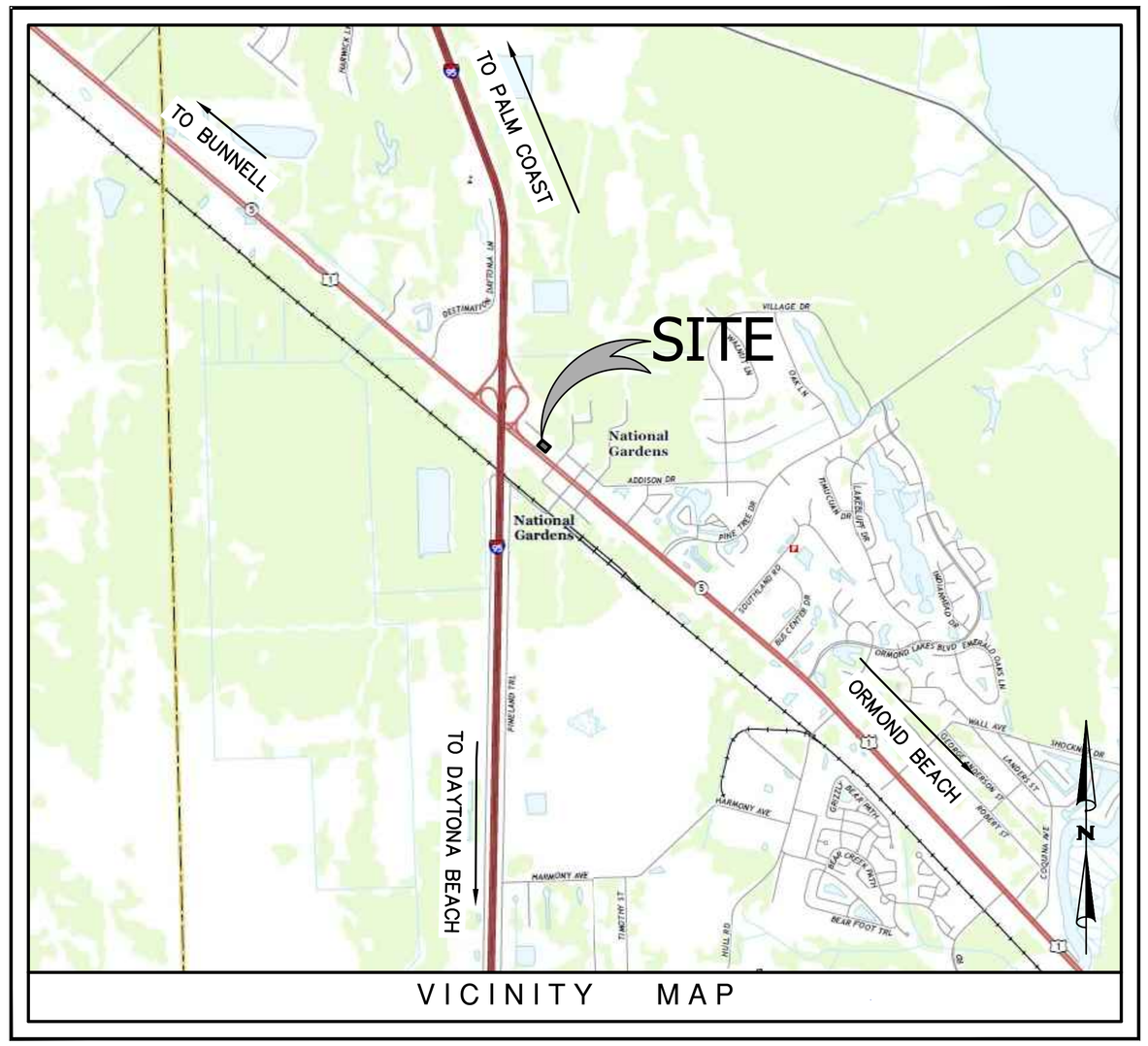

VICINITY MAP

Not to Scale

Hydrologic Soil Group— Summary by Map Unit — Volusia County, Florida (FL127)				
Map unit symbol	Map unit name	Rating	Acres in AOI	Percent of AOI
32	Myakka-Myakka, wet, fine sands, 0 to 2 percent slopes	A/D	0.9	46.6%
51	Pomona-St. Johns complex	A/D	1.0	53.4%
Totals for Area of Interest			1.9	100.0%

INDEX TO SHEETS

SHEET	DESCRIPTION
C1	COVER
C2	EXISTING CONDITIONS
C3	DEMOLITION PLAN
C4	SITE PLAN
C5	GEOMETRIC LAYOUT AND UTILITY PLAN
C6	GRADING AND DRAINAGE PLAN
C7	CIVIL CONSTRUCTION NOTES
C8-C9a	CIVIL CONSTRUCTION DETAILS
C10-C11	FDOT CONSTRUCTION DETAILS
C12	CITY WATER CONSTRUCTION DETAILS
C13	CITY SEWER CONSTRUCTION DETAILS
C14	CITY MISC. CONSTRUCTION DETAILS
C15	EROSION CONTROL PLAN
C16	EROSION CONTROL DETAILS
C17	TRAFFIC CONTROL PLAN

SITE DATA TABLE

STATE OF FLORIDA COUNTY OF VOLUSIA CITY OF ORMOND BEACH	
GREENBELT OVERLAY DISTRICT	
ZONING:	B-7; HWY TOURIST COMM.
F.L.U.	HEAVY COMMERCIAL (HC)
EXISTING USE:	BAR/CLUB
PROPOSED USE:	RETAIL STORE (≈4 EMPLOYEES)
TAX PARCEL ID:	36-13-31-01-36-0020
S36 T13S R31E	
APPROX. 1.424 ACRES	
BUILDING LOT COVERAGE (F.A.R.): 14.7 %	
BUILDING SETBACKS (LANDSCAPE BUFFERS):	
FRONT:	51' (36' GREENBELT OVERLAY)
SIDE:	10' (6')
STREET SIDE / CORNER:	20' (10')
REAR:	20' (6')
PARKING REQUIRED:	1 SPACE / 250 SF GFA
	9100 SF / 250 SF = 37 SPACES
PARKING PROVIDED:	37 SPACES (INC. 2 H/C)
INTERIOR PARKING LANDSCAPE AREAS	
REQUIRED:	10 %
PROVIDED:	10.7 %
IMPERVIOUS RATIO	
EXISTING:	69.0 %
PROPOSED:	57.0 %

LEGAL DESCRIPTION:

PART OF BLOCK 36, NATIONAL GARDENS SUBDIVISION, AS PER PLAT RECORDED IN MAP BOOK 10, PAGES 250 THRU 253, PUBLIC RECORDS OF VOLUSIA COUNTY, FLORIDA, BEING MORE PARTICULARLY DESCRIBED AS FOLLOWS:

AS A POINT OF REFERENCE AND A POINT OF BEGINNING, COMMENCE AT THE INTERSECTION OF THE SOUTHERLY RIGHT-OF-WAY LINE OF ROSEMARY STREET (A 60' RIGHT-OF-WAY) WITH THE EASTERLY RIGHT-OF-WAY LINE OF U.S. HIGHWAY #1 (A 160' RIGHT OF WAY); THENCE N 40°04'40" E ALONG THE SOUTHERLY RIGHT-OF-WAY LINE OF ROSEMARY STREET A DISTANCE OF 210.57 FEET; THENCE LEAVING SAID SOUTHERLY RIGHT-OF-WAY LINE S 49°53'58" E A DISTANCE OF 294.96 FEET; THENCE S 40°04'40" W A DISTANCE OF 209.94 FEET TO THE EASTERLY RIGHT-OF-WAY LINE OF U.S. HIGHWAY #1; THENCE N 50°01'05" W ALONG SAID RIGHT-OF-WAY LINE A DISTANCE OF 294.96 FEET TO THE POINT OF BEGINNING.

PARCEL CONTAINING 1.424 +/- ACRES.

OWNER/DEVELOPER:

HSC ORMOND BEACH, LLC
HAYMES SNEDEKER
PO BOX 130
DAPHNE, AL 36526
(251) 243-0708
(251) 252-9898(FAX)

ENGINEER:

JADE CONSULTING, LLC
TREY JINRIGHT
PO BOX 1929
FAIRHOPE, AL 36533
(251) 928-3443
(251) 928-3665(FAX)

LANDSCAPE ARCHITECT:

WAS DESIGN
TROY STRUNK
218 N. ALSTON STREET
FOLEY, AL 36535
(251) 948-7181
(251) 981-8722

SURVEYOR:

KUHAR SURVEYING AND MAPPING, LLC.
KENNETH J. KUHAR
112 OCEAN GROVE DRIVE
ORMOND BEACH, FL 32176
(386) 295-8051

NOTE: NO CONSTRUCTION AND/OR LAND DISTURBANCE, EXCEPT THOSE NECESSARY TO INSTALL THE BMP'S, SHALL BEGIN ON THIS PROJECT UNTIL THE BMP PLAN HAS BEEN INSTALLED AND APPROVED BY THE CITY.

Jinright & Associates Development Engineers
2008 Greeno Road North Fairhope, Alabama 36532
P.O. Box 1929 Fairhope, Alabama 36533
251.928.3443(tel) 251.928.3665(fax)
FL. CA-27624 jadeengineers.com

JADE CONSULTING, LLC

jared ducote• architect
600 South Barracks Street, Suite 210-6
Pensacola Florida 32502
850/439-1552 (p)
850/439-1554 (f)

REVISIONS:

PRELIMINARY PLANS ONLY
NOT FOR CONSTRUCTION

DOLLAR GENERAL
US HWY 1
ORMOND BEACH, FLORIDA

DOLLAR GENERAL

TREY CLYDE JINRIGHT
LICENSED
NO. 61289
STATE OF FLORIDA
PROFESSIONAL ENGINEER

DATE: 02/19/2016
DRAWING TITLE: DHSVEN - 1446
DRAWN BY – CHECKED BY: PWM - PCJ
SHEET NO.

C1
Cover Sheet

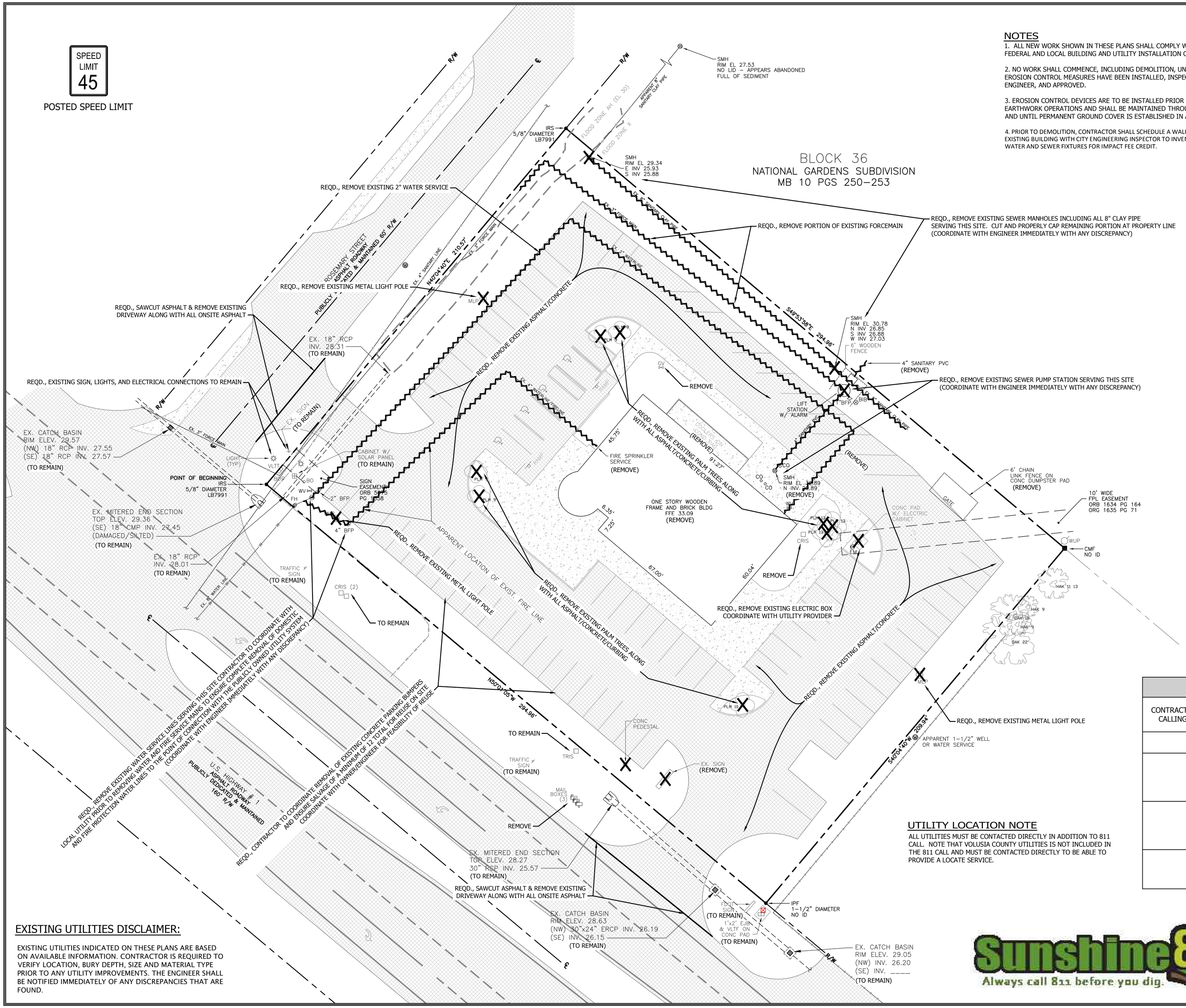

NOTES

1. ALL NEW WORK SHOWN IN THESE PLANS SHALL COMPLY WITH APPLICABLE STATE, FEDERAL AND LOCAL BUILDING AND UTILITY INSTALLATION CODES.

2. NO WORK SHALL COMMENCE, INCLUDING DEMOLITION, UNTIL ALL APPLICABLE EROSION CONTROL MEASURES HAVE BEEN INSTALLED, INSPECTED BY THE PROJECT ENGINEER, AND APPROVED.

3. EROSION CONTROL DEVICES ARE TO BE INSTALLED PRIOR TO ANY CLEARING OR EARTHWORK OPERATIONS AND SHALL BE MAINTAINED THROUGHOUT CONSTRUCTION AND UNTIL PERMANENT GROUND COVER IS ESTABLISHED IN ALL DISTURBED AREAS.

4. PRIOR TO DEMOLITION, CONTRACTOR SHALL SCHEDULE A WALK- THROUGH OF THE EXISTING BUILDING WITH CITY ENGINEERING INSPECTOR TO INVENTORY THE EXISTING WATER AND SEWER FIXTURES FOR IMPACT FEE CREDIT.

N

GRAPHIC SCALE
20 0 20
(IN FEET)
1 inch = 20 ft.

Jinright & Associates Development Engineers
2008 Greene Road North Fairhope, Alabama 36532
P.O. Box 1929 Fairhope, Alabama 36533
251.928.3443(tel) 251.928.3465(fax)
FL. CA. 27624 jadengineers.com

JADE CONSULTING, LLC

LEGEND

- EXISTING WATER LINE
- EXISTING SEWER LINE
- EXISTING GAS LINE
- EXISTING WOODEN FENCE LINE
- EXISTING CHAINLINK FENCE LINE
- PROPERTY LINE
- ADJACENT PROPERTY OWNER LINE
- EX. EASEMENT LINE
- EXISTING 1 FOOT CONTOUR
- EXISTING 5 FOOT CONTOUR
- PROPOSED EASEMENT LINE
- EXISTING SEWER MANHOLE
- EXISTING FIRE HYDRANT
- EXISTING WATER METER
- EXISTING WATER VALVE
- EXISTING LIGHT POLE
- EXISTING LIGHT
- EXISTING PAVING
- EXISTING CONCRETE
- TO BE REMOVED
- TO BE REMOVED

PRELIMINARY PLANS ONLY
NOT FOR CONSTRUCTION

NOTE:

ALL DEMOLITION TO BE DISPOSED OF IN ACCORDANCE WITH ALL LOCAL, STATE, AND FEDERAL LAWS AND REGULATIONS

UTILITY INFORMATION

CONTRACTOR SHALL HAVE ALL EXISTING BURIED UTILITIES "LINE SPOTTED" BY CALLING "SUNSHINE 811" AND BY CONTACTING LOCAL UTILITY COMPANIES

	VOLUSIA COUNTY UTILITIES (386) 257-6000
WATER/SEWER:	CITY OF ORMOND BEACH PUBLIC WORKS DEPARTMENT 501 N ORCHARD STREET, ORMOND BEACH, FL 32174 OFFICE: (386) 676-3220 FAX: (386) 676-3294
ELECTRICAL:	FLORIDA POWER & LIGHT COMPANY JOHNIE WILSON johnie.wilson@fpl.com 5910 E HIGHWAY 100, PALM COAST, FL 32164 (386) 586-6424
GAS:	TECO PEOPLES GAS GEORGE SMITH 1722 RIDEWOOD AVE, HOLLY HILL, FL 32117 OFFICE: (386) 671-2232

UTILITY LOCATION NOTE

ALL UTILITIES MUST BE CONTACTED DIRECTLY IN ADDITION TO 811 CALL. NOTE THAT VOLUSIA COUNTY UTILITIES IS NOT INCLUDED IN THE 811 CALL AND MUST BE CONTACTED DIRECTLY TO BE ABLE TO PROVIDE A LOCATE SERVICE.

EXISTING UTILITIES DISCLAIMER:

EXISTING UTILITIES INDICATED ON THESE PLANS ARE BASED ON AVAILABLE INFORMATION. CONTRACTOR IS REQUIRED TO VERIFY LOCATION, BURY DEPTH, SIZE AND MATERIAL TYPE PRIOR TO ANY UTILITY IMPROVEMENTS. THE ENGINEER SHALL BE NOTIFIED IMMEDIATELY OF ANY DISCREPANCIES THAT ARE FOUND.

Sunshine 811
Always call 811 before you dig.

SURVEY PROVIDED BY:

KUHAR
SURVEYING AND MAPPING, LLC
112 OCEAN GROVE DRIVE, ORMOND BEACH, FL 32176
386-295-8051 - www.kuharsurveying.com
LB 7991 LS (PSM) 6105

REVISIONS:

jared ducote• architect
600 South Barracks Street, Suite 210-6
Pensacola Florida 32502
850/439-1552 (p)
850/439-1554 (f)

DOLLAR GENERAL
US HWY 1
ORMOND BEACH, FLORIDA

DOLLAR GENERAL

JARED C. DUCOTE LICENSE NO. 61289 STATE OF FLORIDA PROFESSIONAL ENGINEER

DATE: 02/19/2016

DRAWING TITLE: DHSVEN - 1446

DRAWN BY - CHECKED BY: PWM - PCJ

SHEET NO.

C3
Demolition Plan

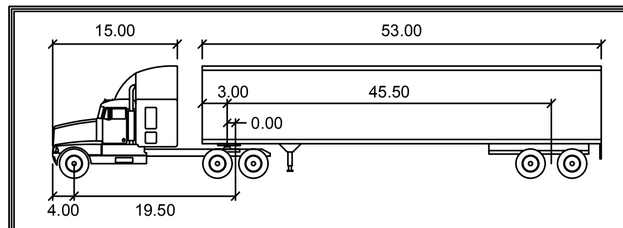

WB-67

	feet		
Tractor Width	: 8.00	Lock to Lock Time	: 6.0
Trailer Width	: 8.50	Steering Angle	: 28.4
Tractor Track	: 8.00	Articulating Angle	: 75.0
Trailer Track	: 8.50		

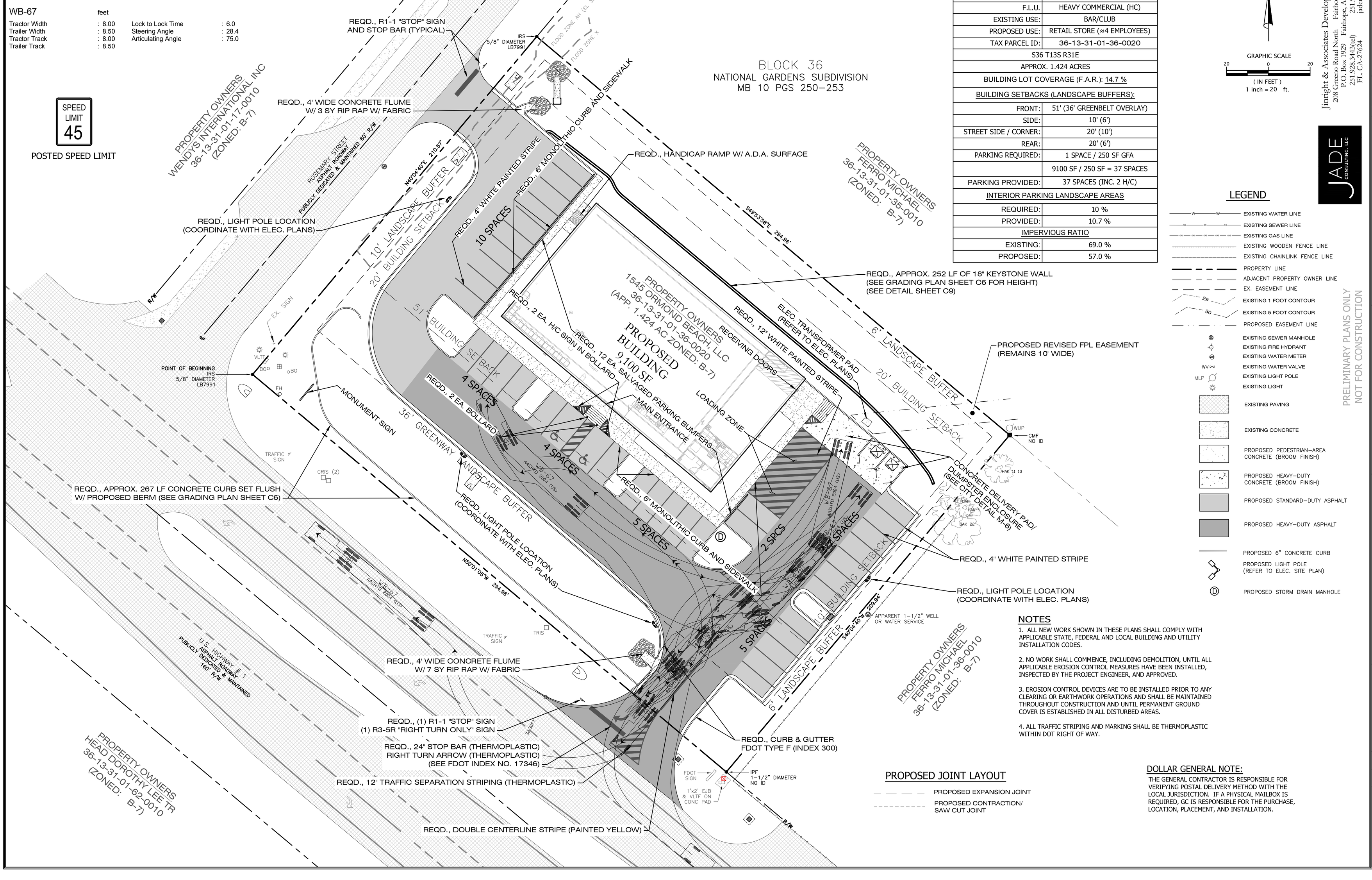

SITE DATA TABLE

STATE OF FLORIDA COUNTY OF VOLUSIA CITY OF ORMOND BEACH	
GREENBELT OVERLAY DISTRICT	
ZONING:	B-7; HWY TOURIST COMM.
F.L.U.	HEAVY COMMERCIAL (HC)
EXISTING USE:	BAR/CLUB
PROPOSED USE:	RETAIL STORE (≈4 EMPLOYEES)
TAX PARCEL ID:	36-13-31-01-36-0020
S36 T13S R31E	
APPROX. 1.424 ACRES	
BUILDING LOT COVERAGE (F.A.R.): 14.7 %	
BUILDING SETBACKS (LANDSCAPE BUFFERS):	
FRONT:	51' (36' GREENBELT OVERLAY)
SIDE:	10' (6')
STREET SIDE / CORNER:	20' (10')
REAR:	20' (6')
PARKING REQUIRED:	1 SPACE / 250 SF GFA
	9100 SF / 250 SF = 37 SPACES
PARKING PROVIDED:	37 SPACES (INC. 2 H/C)
INTERIOR PARKING LANDSCAPE AREAS	
REQUIRED:	10 %
PROVIDED:	10.7 %
IMPERVIOUS RATIO	
EXISTING:	69.0 %
PROPOSED:	57.0 %

GRAPHIC SCALE
20 0 20
(IN FEET)
1 inch = 20 ft.

Jinright & Associates Development Engineers
2008 Greene Road North Fairhope, Alabama 36532
P.O. Box 1929 Fairhope, Alabama 36533
251.928.3443(tel) 251.928.3465(fax)
FL. CA-27624 jadengineers.com

JADE CONSULTING, LLC

LEGEND

- EXISTING WATER LINE
- EXISTING SEWER LINE
- EXISTING GAS LINE
- EXISTING WOODEN FENCE LINE
- EXISTING CHAINLINK FENCE LINE
- PROPERTY LINE
- ADJACENT PROPERTY OWNER LINE
- EX. EASEMENT LINE
- EXISTING 1 FOOT CONTOUR
- EXISTING 5 FOOT CONTOUR
- PROPOSED EASEMENT LINE
- EXISTING SEWER MANHOLE
- EXISTING FIRE HYDRANT
- EXISTING WATER METER
- EXISTING WATER VALVE
- EXISTING LIGHT POLE
- EXISTING LIGHT
- EXISTING PAVING
- EXISTING CONCRETE
- PROPOSED PEDESTRIAN-AREA CONCRETE (BROOM FINISH)
- PROPOSED HEAVY-DUTY CONCRETE (BROOM FINISH)
- PROPOSED STANDARD-DUTY ASPHALT
- PROPOSED HEAVY-DUTY ASPHALT
- PROPOSED 6" CONCRETE CURB
- PROPOSED LIGHT POLE (REFER TO ELEC. SITE PLAN)
- PROPOSED STORM DRAIN MANHOLE

NOTES

1. ALL NEW WORK SHOWN IN THESE PLANS SHALL COMPLY WITH APPLICABLE STATE, FEDERAL AND LOCAL BUILDING AND UTILITY INSTALLATION CODES.

2. NO WORK SHALL COMMENCE, INCLUDING DEMOLITION, UNTIL ALL APPLICABLE EROSION CONTROL MEASURES HAVE BEEN INSTALLED, INSPECTED BY THE PROJECT ENGINEER, AND APPROVED.

3. EROSION CONTROL DEVICES ARE TO BE INSTALLED PRIOR TO ANY CLEARING OR EARTHWORK OPERATIONS AND SHALL BE MAINTAINED THROUGHOUT CONSTRUCTION AND UNTIL PERMANENT GROUND COVER IS ESTABLISHED IN ALL DISTURBED AREAS.

4. ALL TRAFFIC STRIPING AND MARKING SHALL BE THERMOPLASTIC WITHIN DOT RIGHT OF WAY.

PROPOSED JOINT LAYOUT

- PROPOSED EXPANSION JOINT
- PROPOSED CONTRACTION/ SAW CUT JOINT

DOLLAR GENERAL NOTE:

THE GENERAL CONTRACTOR IS RESPONSIBLE FOR VERIFYING POSTAL DELIVERY METHOD WITH THE LOCAL JURISDICTION. IF A PHYSICAL MAILBOX IS REQUIRED, GC IS RESPONSIBLE FOR THE PURCHASE, LOCATION, PLACEMENT, AND INSTALLATION.

PRELIMINARY PLANS ONLY
NOT FOR CONSTRUCTION

REVISIONS:

jared ducote• architect
600 South Barracks Street, Suite 210-6
Pensacola Florida 32502
850/439-1552 (p)
850/439-1554 (f)

DOLLAR GENERAL
US HWY 1
ORMOND BEACH, FLORIDA

DOLLAR GENERAL

JARED CLYDE DUCOTE
LICENSED ARCHITECT
NO. 61289
STATE OF FLORIDA
PROFESSIONAL ENGINEER

DATE: 02/19/2016
DRAWING TITLE: DHSVEN - 1446
DRAWN BY - CHECKED BY: PWM - PCJ
SHEET NO.

C4
Site Plan

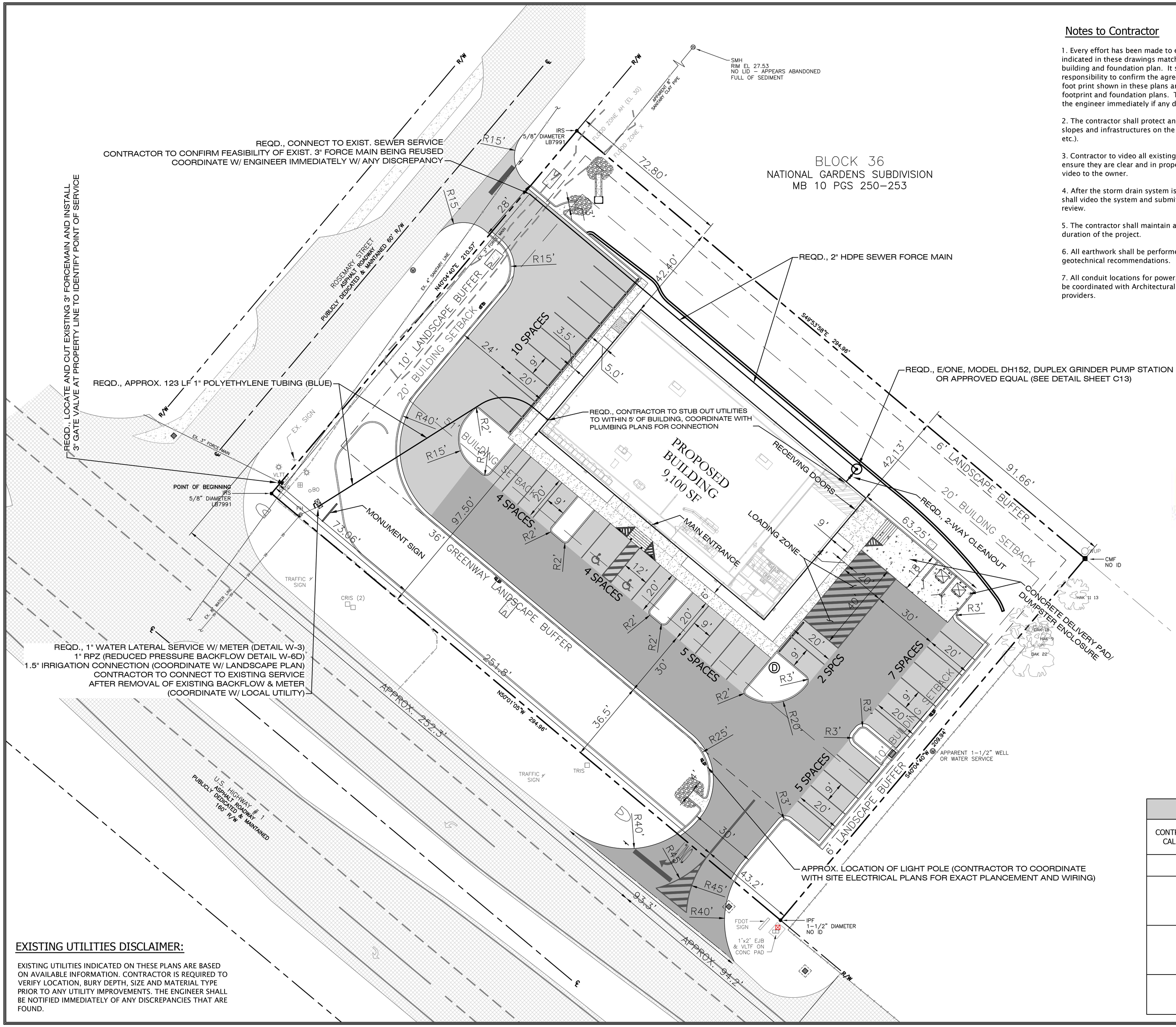

Notes to Contractor

1. Every effort has been made to ensure that the building indicated in these drawings matches the Architects latest building and foundation plan. It shall be the contractors responsibility to confirm the agreement between the building foot print shown in these plans and the Architects building footprint and foundation plans. The contractor shall notify the engineer immediately if any discrepancies are found.

2. The contractor shall protect and maintain any existing slopes and infrastructures on the site (i.e. ponds, inlets, etc.).

3. Contractor to video all existing sewer and drain lines to ensure they are clear and in proper working order. Provide video to the owner.

4. After the storm drain system is completed the contractor shall video the system and submit video to the owner for review.

5. The contractor shall maintain access to the site for the duration of the project.

6. All earthwork shall be performed in strict compliance with geotechnical recommendations.

7. All conduit locations for power, telephone, and cable shall be coordinated with Architectural plans and local utility providers.

LEGEND

- EXISTING WATER LINE
- EXISTING SEWER LINE
- EXISTING GAS LINE
- EXISTING WOODEN FENCE LINE
- EXISTING CHAINLINK FENCE LINE
- PROPERTY LINE
- ADJACENT PROPERTY OWNER LINE
- EX. EASEMENT LINE
- EXISTING 1 FOOT CONTOUR
- EXISTING 5 FOOT CONTOUR
- PROPOSED EASEMENT LINE
- EXISTING SEWER MANHOLE
- EXISTING FIRE HYDRANT
- EXISTING WATER METER
- EXISTING WATER VALVE
- EXISTING LIGHT POLE
- EXISTING LIGHT
- EXISTING PAVING
- EXISTING CONCRETE
- PROPOSED PEDESTRIAN-AREA CONCRETE (BROOM FINISH)
- PROPOSED HEAVY-DUTY CONCRETE (BROOM FINISH)
- PROPOSED STANDARD-DUTY ASPHALT
- PROPOSED HEAVY-DUTY ASPHALT
- PROPOSED 6" CONCRETE CURB
- PROPOSED LIGHT POLE (REFER TO ELEC. SITE PLAN)
- PROPOSED STORM DRAIN MANHOLE

Sunshine 811 — Always call 811 before you dig.

UTILITY LOCATION NOTE

ALL UTILITIES MUST BE CONTACTED DIRECTLY IN ADDITION TO 811 CALL. NOTE THAT VOLUSIA COUNTY UTILITIES IS NOT INCLUDED IN THE 811 CALL AND MUST BE CONTACTED DIRECTLY TO BE ABLE TO PROVIDE A LOCATE SERVICE.

UTILITY INFORMATION

CONTRACTOR SHALL HAVE ALL EXISTING BURIED UTILITIES "LINE SPOTTED" BY CALLING "SUNSHINE 811" AND BY CONTACTING LOCAL UTILITY COMPANIES

	VOLUSIA COUNTY UTILITIES (386) 257-6000
WATER/SEWER:	CITY OF ORMOND BEACH PUBLIC WORKS DEPARTMENT 501 N ORCHARD STREET, ORMOND BEACH, FL 32174 OFFICE: (386) 676-3220 FAX: (386) 676-3294
ELECTRICAL:	FLORIDA POWER & LIGHT COMPANY JOHNIE WILSON johnie.wilson@fpl.com 5910 E HIGHWAY 100, PALM COAST, FL 32164 (386) 586-6424
GAS:	TECO PEOPLES GAS GEORGE SMITH 1722 RIDEWOOD AVE, HOLLY HILL, FL 32117 OFFICE: (386) 671-2232

EXISTING UTILITIES DISCLAIMER:

EXISTING UTILITIES INDICATED ON THESE PLANS ARE BASED ON AVAILABLE INFORMATION. CONTRACTOR IS REQUIRED TO VERIFY LOCATION, BURY DEPTH, SIZE AND MATERIAL TYPE PRIOR TO ANY UTILITY IMPROVEMENTS. THE ENGINEER SHALL BE NOTIFIED IMMEDIATELY OF ANY DISCREPANCIES THAT ARE FOUND.

Jinright & Associates Development Engineers
2008 Greenwo Road North Fairhope, Alabama 36532
P.O. Box 1929 Fairhope, Alabama 36533
251.928.3443(tel) 251.928.3465(fax)
FL. CA-27624 jadengineers.com

JADE CONSULTING, LLC

jared ducote• architect
600 South Barracks Street, Suite 210-6
Pensacola Florida 32502
850/439-1552 (p)
850/439-1554 (f)

REVISIONS:

PRELIMINARY PLANS ONLY
NOT FOR CONSTRUCTION

DOLLAR GENERAL
US HWY 1
ORMOND BEACH, FLORIDA

DOLLAR GENERAL

JARED CYDE DUCOTE
LICENSE NUMBER
NO. 61289
STATE OF FLORIDA
PROFESSIONAL ENGINEER

DATE: 02/19/2016

DRAWING TITLE: DHSVEN - 1446

DRAWN BY - CHECKED BY: PWM - PCJ

SHEET NO.

C5

Geometric Layout and Utility Plan

Profile View of West Driveway

SCALE
HORIZONTAL: 1"=5'
VERTICAL: 1"=10'

Profile View of FDOT Commercial Driveway

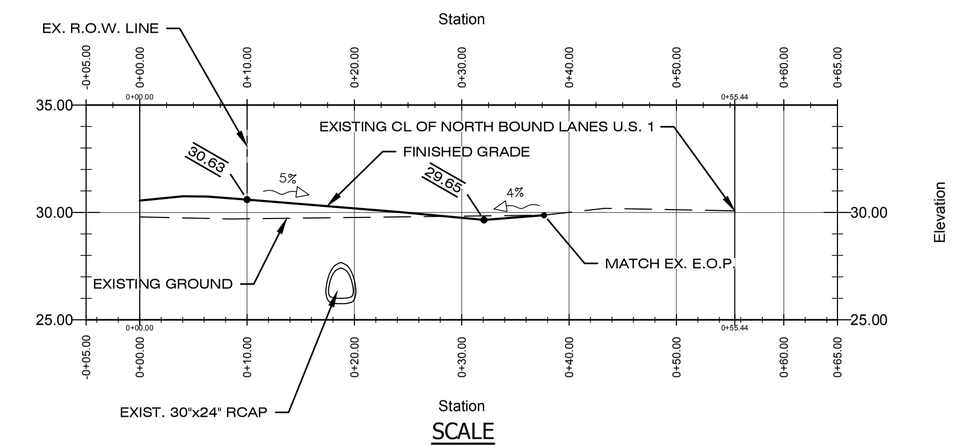

SCALE
HORIZONTAL: 1"=5'
VERTICAL: 1"=10'

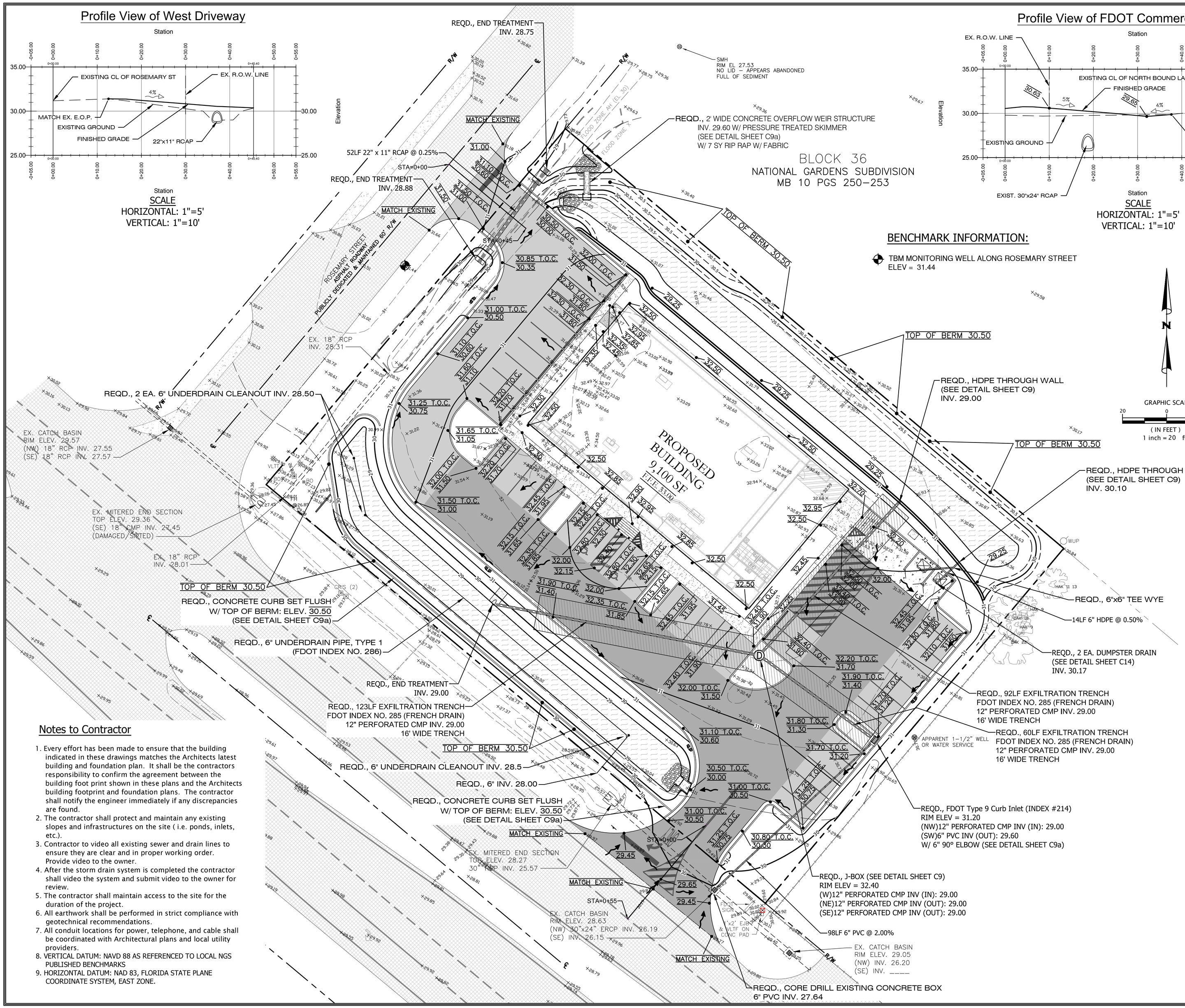

Notes to Contractor

1. Every effort has been made to ensure that the building indicated in these drawings matches the Architects latest building and foundation plan. It shall be the contractors responsibility to confirm the agreement between the building foot print shown in these plans and the Architects building footprint and foundation plans. The contractor shall notify the engineer immediately if any discrepancies are found.
2. The contractor shall protect and maintain any existing slopes and infrastructures on the site (i.e. ponds, inlets, etc.).
3. Contractor to video all existing sewer and drain lines to ensure they are clear and in proper working order. Provide video to the owner.
4. After the storm drain system is completed the contractor shall video the system and submit video to the owner for review.
5. The contractor shall maintain access to the site for the duration of the project.
6. All earthwork shall be performed in strict compliance with geotechnical recommendations.
7. All conduit locations for power, telephone, and cable shall be coordinated with Architectural plans and local utility providers.
8. VERTICAL DATUM: NAVD 88 AS REFERENCED TO LOCAL NGS PUBLISHED BENCHMARKS
9. HORIZONTAL DATUM: NAD 83, FLORIDA STATE PLANE COORDINATE SYSTEM, EAST ZONE.

SURVEY PROVIDED BY:

KUHAR
SURVEYING AND MAPPING, LLC
112 OCEAN GROVE DRIVE, ORMOND BEACH, FL 32176
386-295-8051 - www.kuharsurveying.com
LB 7991 LS (PSM) 6105

Jinright & Associates Development Engineers
2008 Greene Road North Fairhope, Alabama 36532
P.O. Box 1929 Fairhope, Alabama 36533
251.928.3443(tel) 251.928.3465(fax)
FL. CA-27624 jadengineers.com

JADE CONSULTING, LLC

REVISIONS:

PRELIMINARY PLANS ONLY
NOT FOR CONSTRUCTION

jared ducote• architect
600 South Barracks Street, Suite 210-6
Pensacola Florida 32502
850/439-1552 (p)
850/439-1554 (f)

DOLLAR GENERAL
US HWY 1
ORMOND BEACH, FLORIDA

DOLLAR GENERAL

JARED C. DUCOTE LICENSE NUMBER NO. 61289 STATE OF FLORIDA PROFESSIONAL ENGINEER

DATE: 02/19/2016
DRAWING TITLE: DHSVEN - 1446
DRAWN BY – CHECKED BY: PWM - PCJ
SHEET NO.

C6
Grading and Drainage Plan

PLANT SCHEDULE

TREES	CODE	QTY	BOTANICAL NAME	COMMON NAME	CONT	CAL	HT	REMARKS
	IL	6	Ilex cassine	Dahoon Holly	45 gal	3.5"Cal		Standard
	LM	10	Lagerstroemia x `Muskogee`	Lavender Crape Myrtle Multi-Trunk	45 gal	3.5"Cal		Multi trunk; full head
	MB	11	Magnolia virginiana	Sweet Bay Magnolia	45 gal	3.5"Cal		Full to ground
	QV	3	Quercus virginiana	Southern Live Oak	65 gal	3.5"Cal		
	SS	6	Sabal palmetto	Cabbage Palmetto	B & B		16`-18` CT	
	TD2	9	Taxodium distichum	Bald Cypress	45 gal	3.5"Cal		

SHRUBS	CODE	QTY	BOTANICAL NAME	COMMON NAME	CONT	HT	SPACING	REMARKS
	FE	64	Feijoa sellowiana	Pineapple Guava	3 gal		48" o.c.	Shrub form
	IL2	157	Ilex vomitoria	Yaupon Holly	3 gal		48" o.c.	
	PD	72	Podocarpus macrophyllus `Dwarf Pringles`	Dwarf Podocarpus	3 gal		36" o.c.	

SHRUB AREAS	CODE	QTY	BOTANICAL NAME	COMMON NAME	CONT	SPACING	REMARKS
	IV	217	Iris virginica	Blue Flag Iris	1 gal	24" o.c.	
	LV	569	Liriope muscari `Variegata`	Variegated Lily Turf	1 gal	18" o.c.	
	MU	159	Muhlenbergia capillaris	Pink Muhly	3 gal	42" o.c.	
	SR	115	Serenoa repens	Saw Palmetto	3 gal	48" o.c.	

GROUND COVERS	CODE	QTY	BOTANICAL NAME	COMMON NAME	CONT	SPACING	REMARKS
	HD	242	Helianthus debilis	Beach Sunflower	1 gal	30" o.c.	
	PN	10,123 sf	Paspalum notatum	Bahia Grass	sod		
	ST	5,908 sf	Stenotaphrum secundatum	St. Augustine Grass	sod		

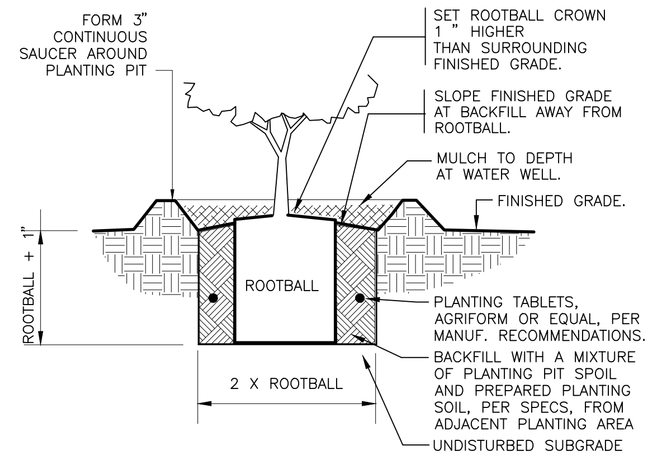

1 SHRUB PLANTING
1" = 12" 329333.13-01

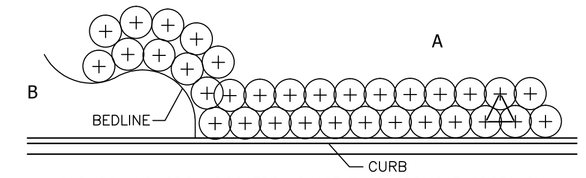

A SHRUBS AND GROUNDCOVERS ADJACENT TO STRAIGHT EDGES SHALL BE TRIANGULAR – SPACED IN ROWS PARALLED TO THE STRAIGHT EDGE.

B SHRUBS AND GROUNDCOVERS ADJACENT TO CURVED EDGES SHALL BE PLANTED IN ROWS PARALLEL TO THE CURVED EDGES. CURVED EDGES TO BE VERY SMOOTH RADII.

2 TYPICAL PLANT SPACING
NOT TO SCALE 329399-04

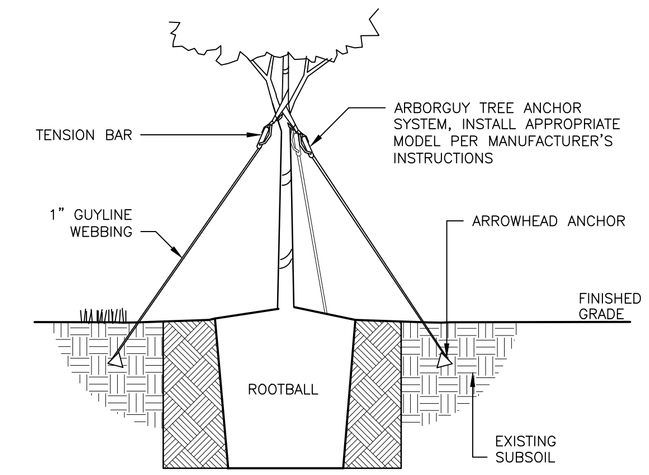

STAKING DETAIL

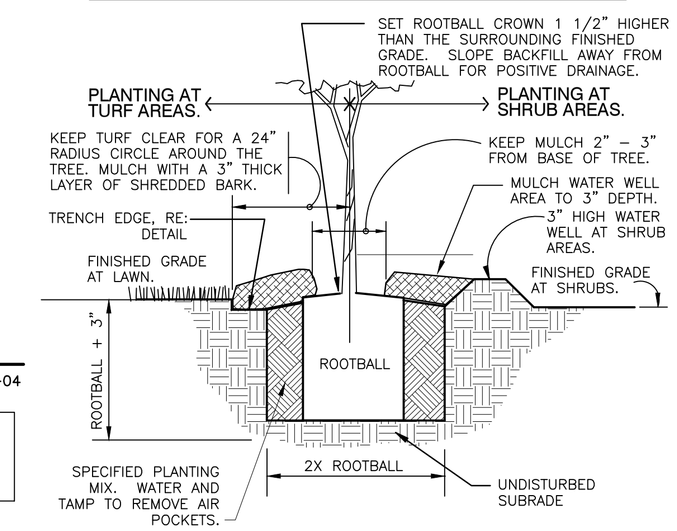

PLANT PIT DETAIL

3 TREE PLANTING - GUY STRAP
1" = 1'-0" 329343.26-02

NOTE:
- STAKE TO FIRST BRANCHES AS NECESSARY FOR FIRM SUPPORT
- WIRE SHALL NOT TOUCH OR RUB ADJACENT TRUNKS OR BRANCHES

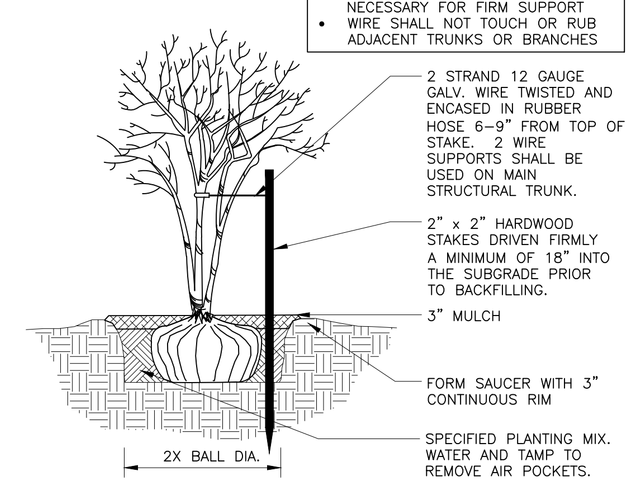

4 MULTI-TRUNK TREE STAKING
1/2" = 1'-0" 329343-01

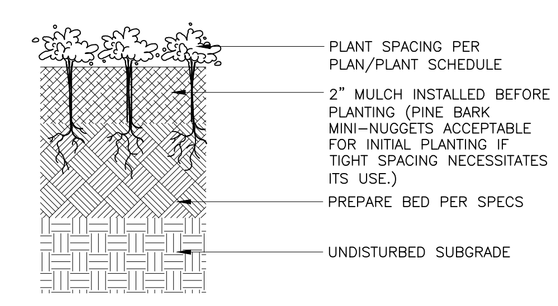

5 GROUNDCOVER PLANTING
3" = 1'-0" 329313-01

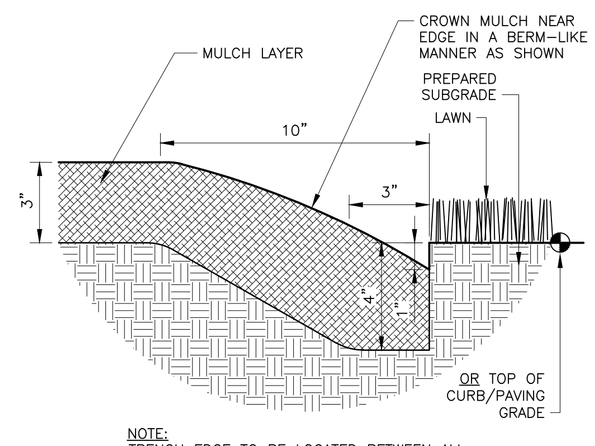

NOTE:
TRENCH EDGE TO BE LOCATED BETWEEN ALL PLANTING BED AREAS AND ADJACENT TURF AREAS, UNLESS NOTED OTHERWISE.

6 TRENCH EDGE
3" = 1'-0" 329413.23-02

GENERAL CONDITIONS
- CONTRACTOR SHALL BE RESPONSIBLE FOR THE SITE INSPECTION PRIOR TO LANDSCAPE CONSTRUCTION AND INSTALLATION IN ORDER TO ACQUAINT HIMSELF WITH EXISTING CONDITIONS. CONTRACTOR SHALL BE RESPONSIBLE FOR LOCATING ALL EXISTING UNDERGROUND UTILITIES BEFORE BEGINNING CONSTRUCTION.
- CONTRACTOR IS RESPONSIBLE FOR PROTECTION OF LANDSCAPE MATERIAL AT ALL TIMES. LANDSCAPE CONTRACTOR TO COORDINATE SAFE STAGING AREA WITH GENERAL CONTRACTOR AND/OR OWNER.
- CONTRACTOR SHALL GUARANTEE ALL PLANT MATERIAL, INCLUDING GRASS, FOR 365 CONSECUTIVE CALENDAR DAYS FROM SUBSTANTIAL COMPLETION OF THE WORK, AS DETERMINED BY THE PROJECT LANDSCAPE ARCHITECT.
- ALL AREAS IMPACTED NEGATIVELY BY CONSTRUCTION PROCESSES SHALL BE RETURNED TO ORIGINAL CONDITION OR BETTER PRIOR TO SUBSTANTIAL COMPLETION.

LANDSCAPE AREA SOIL PREPARATION
- SOIL SHALL BE AMENDED BY THE ADDITION OF COMPOST AND FERTILIZER. COMPOST TYPE SHALL BE MUSHROOM COMPOST OR DECOMPOSED PINE BARK, AND SHALL BE APPROVED BY LANDSCAPE ARCHITECT PRIOR TO PURCHASE. COMPOST SHALL BE UNIFORMLY APPLIED OVER PLANTING BEDS AT AN AVERAGE DEPTH OF 2 INCHES AND OVER SOD AREAS AT AN AVERAGE DEPTH OF 3/4 INCH.
- INCORPORATE UNIFORMLY IN PLANTING BEDS TO A DEPTH OF 6 INCHES AND IN SOD AREAS TO A DEPTH OF 3 INCHES USING A ROTARY TILLER OR OTHER APPROPRIATE EQUIPMENT. PRE–PLANT FERTILIZER AND PH ADJUSTING AGENTS (E.G., LIME AND SULFUR) MAY BE APPLIED IN CONJUNCTION WITH COMPOST INCORPORATION, AS NECESSARY.
- RAKE SOIL SURFACE SMOOTH PRIOR TO PLANTING.
- REMOVE STONES LARGER THAN 1 INCH IN ANY DIMENSION AND STICKS, ROOTS, RUBBISH, AND OTHER EXTRANEOUS MATTER AND LEGALLY DISPOSE OF THEM OFF OWNER'S PROPERTY.
- WATER THOROUGHLY AFTER PLANTING.
- CONTRACTOR SHALL BE RESPONSIBLE FOR PROVIDING 3% POSITIVE DRAINAGE IN ALL PLANTING BEDS. ANY OTHER PROPOSED DRAINAGE METHODS SHALL BE COORDINATED WITH PLANTING EFFORTS TO MINIMIZE CONFLICTS AND MAINTAIN PROPER FUNCTION OF DRAINAGE SYSTEMS.

PLANT MATERIAL AND PLANTING
- PLANT QUANTITIES ARE OFFERED AS A CONVENIENCE TO THE CONTRACTOR, AND ARE NOT ABSOLUTE. CONTRACTOR SHALL VERIFY PLANT COUNT FROM PLAN AND REPORT DIFFERENCES.
- ALL PLANT MATERIALS ARE SUBJECT TO APPROVAL OR REFUSAL BY THE OWNER OR LANDSCAPE ARCHITECT AT THE JOB SITE.
- PLANTS SHALL BE WELL FORMED, VIGOROUS, GROWING SPECIMENS WITH GROWTH TYPICAL OF VARIETIES SPECIFIED AND SHALL BE FREE FROM INJURY, INSECTS AND DISEASES. PLANTS SHALL EQUAL OR SURPASS QUALITY AS DEFINED IN THE CURRENT ISSUE OF "AMERICAN STANDARDS FOR NURSERY STOCK" AS PUBLISHED BY THE AMERICAN NURSERYMEN, INC.
- UNLESS NOTED SPECIFICALLY, ALL PLANT MATERIAL SHALL BE BALLED AND BURLAPPED OR CONTAINER GROWN.
- FRONT ROW OF SHRUBS SHALL BE PLANTED FROM CENTER OF PLANT A MINIMUM OF 24" BEHIND BED LINE @ LAWNS OR WALKS AND A MINIMUM OF 36" BACK OF CURB @ PARKING SPACES.
- NO PRUNING SHOULD BE PERFORMED DURING FIRST GROWING SEASON EXCEPT FOR REMOVING DAMAGED OF DEAD GROWTH. WOUND PAINT IS NOT RECOMMENDED FOR ANY CUTS.
- ALL PLANTING AREAS, TREE PITS, AND OTHER AREAS INDICATED ON PLANS SHALL BE MULCHED WITH A SETTLED LAYER OF THE INDICATED MULCH:
  - ☐ 3" DEPTH PINE BARK
  - ☐ 4" DEPTH SHREDDED HARDWOOD MULCH
  - ☒ 3" DEPTH PINESTRAW
- TRENCH EDGE TO BE LOCATED BETWEEN ALL PLANTING AREAS AND LAWN, UNLESS NOTED OTHERWISE.
- TREE STAKING SHALL BE PROVIDED TO KEEP TREES PLUMB AND PROTECTED FROM EXCESSIVE WINDS. ALL TREE–STAKING APPARATUS SHALL BE REMOVED AT THE END OF THE ONE–YEAR WARRANTY PERIOD.
- ONE YEAR OF LANDSCAPE MAINTENANCE FROM SUBSTANTIAL COMPLETION SHALL BE INCLUDED AS AN OPTIONAL BID ITEM TO THE OWNER.

7 GENERAL PLANTING NOTES
1" = 1" 329399-05

REVISIONS:
03/17/2016
03/31/2016

jared ducote• architect
600 South Barracks Street, Suite 210-6
Pensacola, Florida 32502
850/439-1552 (p)
850/439-1554 (f)

DOLLAR GENERAL
US HWY 1
ORMOND BEACH, FLORIDA

DOLLAR GENERAL

Registration – FL LA6666896
REGISTERED LANDSCAPE ARCHITECT LESTER CHAD WATKINS LA6666896 STATE OF FLORIDA
Drawings not valid without seal

DATE: 02/19/2016
DRAWING TITLE: LANDSCAPE PLANTING DETAILS
DRAWN BY – CHECKED BY: SW LCW
SHEET NO. LP500

WSdesign
WATKINS • ACY • STRUNK
landscape architecture • land planning • placemaking
218 N. Alston Street, Foley, Alabama 36535
Telephone 251.948.2181 Facsimile 251.981.8222
www.wsdesign.com

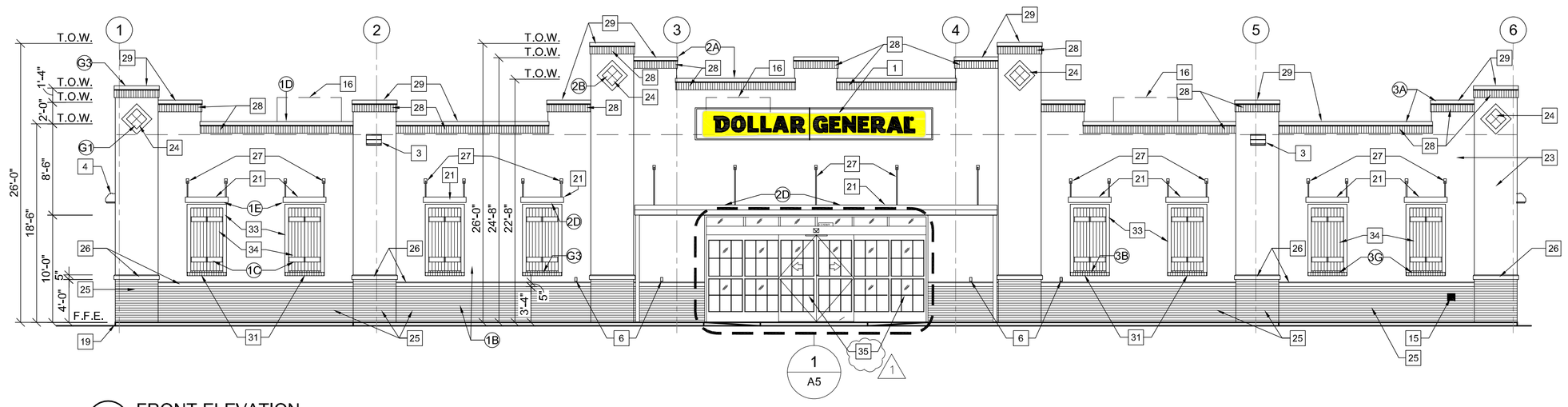

1 A02 FRONT ELEVATION
SCALE: 1/8"=1'-0"

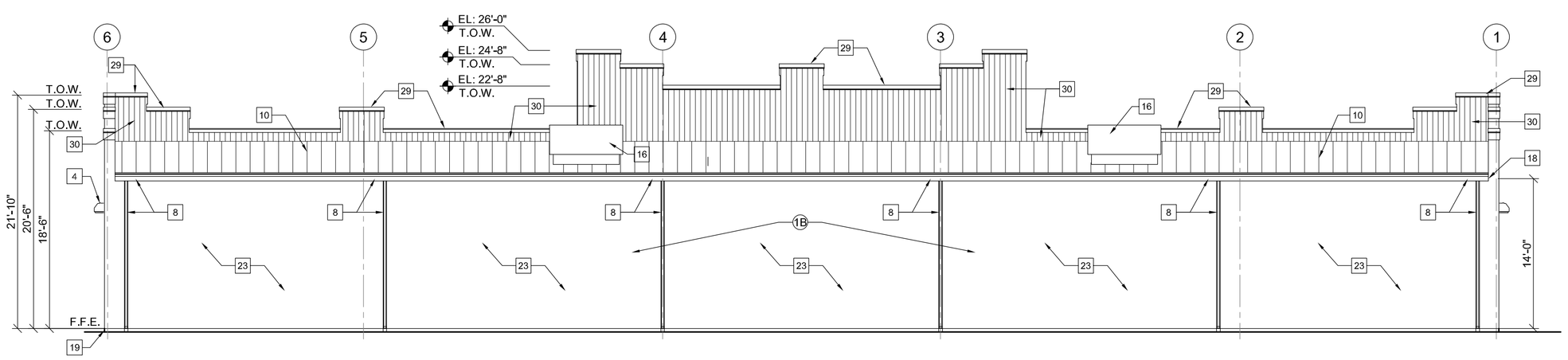

2 A02 REAR ELEVATION
SCALE: 1/8"=1'-0"

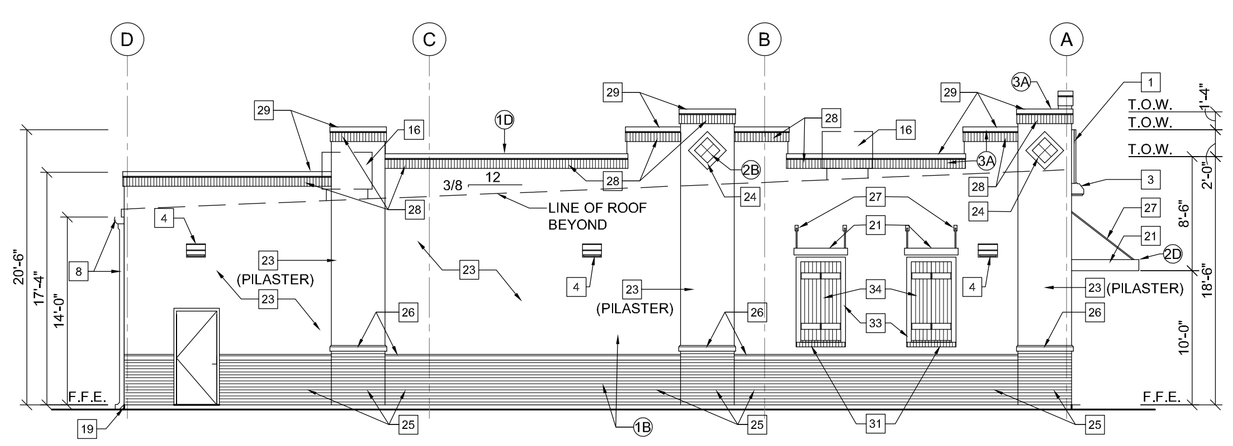

3 A02 LEFT ELEVATION
SCALE: 1/8"=1'-0"

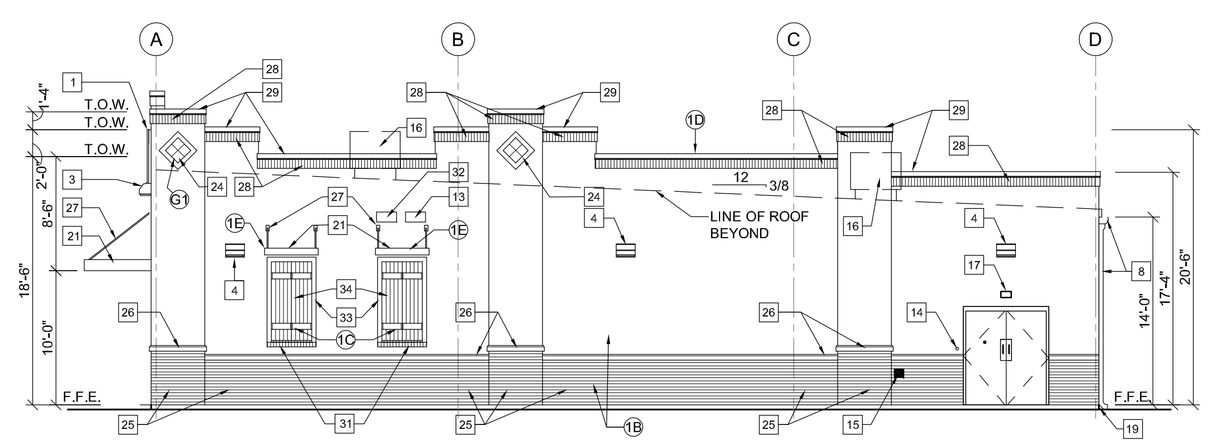

4 A02 RIGHT ELEVATION
SCALE: 1/8"=1'-0"

ZONING COMPLIANCE NOTES

SPANISH ARCHITECTURAL STYLE
Notes reference Article VI Sec 3-69 (d)

#a *- Denotes compliance item as noted below*

1. DESIGN GUIDELINES
   - A) BUILDING MASSING IS SYMMETRICAL
   - B) EXTERIOR BUILDING MATERIALS:
     - -STUCCO
     - -BRICK (TRIM AND WAINSCOT)
   - C) WINDOWS (SIMULATED WITH CLOSED SHUTTERS)
   - D) ROOF LINES
     - -FLAT PARAPETS.
   - E) WINDOWS ARE RECTANGULAR WITH AWNINGS
   - F) COLORS SHALL BE LIGHT EARTH TONES + DARK TRIM
   - G) DETAILS
     - 1. DECORATIVE TILES AT PILASTERS
     - 2. NOT APPLICABILE
     - 3. ADDITIONAL DETAILS (1 REQUIRED)
       - i) PARAPET WALLS ARE DETAILED
       - ii) BRICK WINDOWS SILLS INCLUDED
       - iii) NOT USED
2. REQUIRED ATTRIBUTES
   - A) DISTINCTIVE GEOMETRIC PARAPET WALL
   - B) DECORATIVE TILE ON PARAPET WALL
   - C) WROUGHT IRON RAILING - NOT APPLICABLE
   - D) DECORATIVE AWNINGS
3. OPTIONAL ATTRIBUTES (3 REQUIRED)
   - A) BRICK PARAPET DETAILING
   - B) BRICK SILL
   - C) BARREL CLAY TILE ROOF - NOT USED
   - D) BRICK/STUCCO/WROUGHT IRON FENCE - NOT USED
   - E) BRICK AND STUCCO CONSTRUCTION

EXTERIOR COLORS/MATERIALS

EIFS/STUCCO	SHERWIN WILLIAMS - SW 6155 "RICE GRAIN" MEDIUM SAND FINISH
WINDOW TRIM	SHERWIN WILLIAMS - SW 6157 "FAVORITE TAN" SMOOTH FINISH
PARAPET CAP	"SANDSTONE" BY BIGGEE STEEL BUILDINGS
ENTRY DOORS	DARK BRONZE ANODIZED ALUMINUM
LIGHT FIXTURES	DARK BRONZE ANODIZED ALUMINUM
AWNINGS	DARK BRONZE ANODIZED ALUMINUM
EXT. DOORS	SHERWIN WILLIAMS - SW 6155 "RICE GRAIN"
SHUTTERS	TO MATCH DARK BRONZE STOREFRONT
MASONRY	"PLYMOUTH BRICK - CRIMSON" BY NICHIHA

ELEVATION KEYED NOTES

1. SIGN FURNISHED AND INSTALLED BY DOLLAR GENERAL CORP. WITH CIRCUIT AS NOTED ON ELECTRICAL PLAN. SIGN TO BE CENTERED ON FRONT OF BUILDING. CONTRACTOR IS TO PROVIDE ADEQUATE BLOCKING AS REQUIRED BY SIGN MANUFACTURER TO SUPPORT SIGN WEIGHT OF UP TO 1,400 LBS. EXTERIOR CANOPY SIGN SHALL BE SUPPORTED BY THE FACE OF THE CANOPY. COORDINATE THE PROPER SIGNAGE TO BE USED WITH DOLLAR GENERAL.
2. NOT USED
3. FULL CUTOFF WALL PACK. 16'-6" A.F.F. TO TOP. REFER TO ELECTRICAL DRAWINGS FOR ADDITIONAL INFORMATION.
4. FULL CUTOFF WALL PACK 12'-0" A.F.F. TO TOP. REFER TO ELECTRICAL DRAWINGS FOR ADDITIONAL INFORMATION.
5. WALL PACK. (ALTERNATE PARKING LIGHT) REFER TO ELECTRICAL DRAWINGS FOR ADDITIONAL INFORMATION. REQUIRED ONLY IF THERE IS PARKING THIS SIDE OF BUILDING.
6. RECEPTACLE. REFER TO E1 FOR ADDITIONAL INFORMATION.
7. TRIM - SEE EXTERIOR FINISH SCHEDULE FOR COLOR.
8. GUTTER AND DOWNSPOUT - SEE EXTERIOR FINISH SCHEDULE FOR COLOR.
9. NOT USED
10. STANDING SEAM METAL ROOF. GALVALUME FINISH.
11. PRE-FINISHED METAL WALL PANELS, REVERSE RIB PROFILE. SEE EXTERIOR FINISH SCHEDULE FOR COLOR.
12. PRE-FINISHED METAL WALL PANELS. PROVIDE TAMPER-RESISTANT FASTENERS FOR BOTTOM 8'-0". SEE EXTERIOR FINISH SCHEDULE FOR COLOR.
13. VENT FOR BATHROOM EXHAUST. REFER TO M01 FOR ADDITIONAL INFORMATION.
14. DOOR BUZZER. REFER TO E01 FOR ADDITIONAL INFORMATION.
15. WALL HYDRANT. REFER TO P01 FOR ADDITIONAL INFORMATION.
16. HVAC UNITS MOUNTED ON ROOF. REFER TO MECHANICAL SHEET M1 FOR MORE INFORMATION.
17. OUTSIDE AIR TEMP. SENSOR MOUNTED OVER RECEIVING DOORS @ 8'-0" A.F.F.
18. MINIMUM EAVE HEIGHT IS 14'-0" A.F.F.
19. FINISHED GRADE AT EXTERIOR WALLS SHALL BE A MINIMUM OF 6" BELOW FINISHED FLOOR AT ALL NON PAVED AREAS.
20. IN NORTHERN CLIMATES, PROVIDE SNOW GUARDS ON ROOF PER LOCAL CODE.
21. PRE-ENGINEERED METAL CANOPY BY TENNESSEE VALLEY METALS OR APPROVED EQUAL
22. 1/2" DIAMETER x 6" LONG STAINLESS STEEL EYE BOLTS (CLOSED) WITH 1" DIAMETER OPENINGS. DRILL AND EPOXY INTO BLOCK WALL. 4 BOLTS TO BE LOCATED AS SHOWN EACH SIDE OF ENTRY, TOTAL OF 8 BOLTS.
23. EIFS OVER METAL WALL PANELS
24. DECORATIVE TILES @ PILASTERS
25. EXTERIOR, PANELIZED FIBER CEMENT CLADDING SYSTEM. EQUAL TO "NICHIHA" BRICK SERIES "PLYMOUTH BRICK" CRIMSON.
26. EIFS WATER TABLE
27. CANOPY SUPPORT RODS
28. THIN BRICK SOLDIER COURSE. COLOR TO MATCH "NICHIHA" BRICK SERIES "PLYMOUTH BRICK" CRIMSON.
29. PRE FINISHED METAL COPING
30. PEMB METAL WALL PANELS ON BACK OF PARAPET
31. BRICK SILL
32. SANITARY SEWER AND SANITARY VENT PIPE. COORDINATE PIPE ROUTING WITH FIELD CONDITIONS. REFER TO PIPING DIAGRAMS ON SHEET P2.
33. 4" WIDE RAISED EIFS TRIM
34. CLOSED SHUTTER
35. SURFACE APPLIED MUNTIN BARS (1)

REVISIONS:

1	03/18/16

jared ducote• architect
600 South Barracks Street, Suite 210-6
Pensacola, Florida 32502
850/439-1552 (p)
850/439-1554 (f)

DOLLAR GENERAL
US HWY 1
ORMOND BEACH, FLORIDA

DOLLAR GENERAL®

STATE OF FLORIDA
JARED F DUCOTE
AR94219
REGISTERED ARCHITECT

DATE:
02/19/2016

DRAWING TITLE
EXTERIOR ELEVATIONS

DRAWN BY - CHECKED BY
DRB/JFD

SHEET NO.
A002