SITE DEVELOPMENT PLAN FOR
WINDOW WORLD SHOWROOM & WAREHOUSE
at 1142 US HWY 1 – ORMOND BEACH
APRIL 23, 2015

City of Ormond Beach — FINAL APPROVAL — Site Plan Review Committee

ORMOND BEACH
SITE PLAN REVIEW COMMITTEE
FINAL APPROVAL
1.4.2016
Date

IN ORDER TO ENSURE THAT ALL WORK WITHIN THE CITY IS CONSTRUCTED IN ACCORDANCE WITH ALL RELEVANT FEDERAL, STATE AND COUNTY REGULATIONS, IN ADDITION TO THE CITY REGULATIONS, THE APPLICANT SHALL CHECK ALL OUTSIDE AGENCY PERMITS REQUIRED FOR THIS PROJECT ON THE LIST BELOW.

THIS LIST WILL ALSO BE USED BY CITY PERSONNEL TO VERIFY THAT ONE HARD COPY AND ONE PDF OF ALL REQUIRED PERMITS ARE SUBMITTED TO THE PLANNING DEPARTMENT PRIOR TO FINAL SITE PLAN REVIEW COMMITTEE (SPRC) SIGNOFF.

1 [N/A] SJRWMD ENVIRONMENTAL RESOURCE PERMIT (ERP)
2 [ ] DEP WASTEWATER CONSTRUCTION/CONNECTION PERMIT
3 [N/A] DEP WATER CONSTRUCTION/CONN. PERMIT
4 [N/A] FDOT UTILITY PERMIT
5 [N/A] FDOT DRIVEWAY CONNECTION PERMIT
6 [N/A] COUNTY USE PERMIT
7 [N/A] FDOT DRAINAGE CONNECTION PERMIT
8 [N/A] DEP NPDES NOI
9 [N/A] OTHER (PLEASE SPECIFY)

PARKING REQUIRED FOR "BUSINESS/STORAGE
WAREHOUSE & SHOWROOM AREA (WHS) = 2975 GSF
OFFICE AREA = 225 GSF

TOTAL SPACES REQUIRED
2 SPACE PER 1ST 1000 GSF WHS & OFFICE (FIRST 200 SF)
PLUS ONE SPACE FOR EACH ADD'L 750 SF OF WHS
PLUS ONE SPACE FOR EACH ADD'L 200 SF OF OFFICE

TOTAL REQUIRED = 2 + (1975/750) + 1 = 5.63, SAY 6

PARKING PROVIDED

REGULAR SPACES	=	5 SPACES
HANDICAP SPACES	=	1 SPACE
TOTAL SPACES PROVIDED	=	6 SPACES

KIRBY ENGINEERING, L.L.C. JOHN R. KIRBY, P.E.
P. O. BOX 770669 WINTER GARDEN, FL. 34777 (407) 877-9400

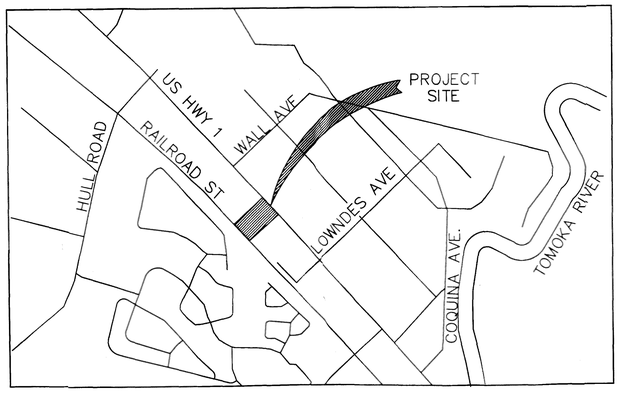

LOCATION MAP

Tax Parcel ID: 4238-02-0-0100
Address: 1142 US HWY 1

OWNER:	BRIAN TILLMAN TILLMAN VOLUSIA HOLDINGS LLC 3882 CENTER LOOP ORLANDO, FL 32808	407-383-9693
ENGINEER:	KIRBY ENGINEERING, L.L.C. JOHN KIRBY, P.E. P. O. BOX 770669 WINTER GARDEN, FLORIDA 34787	407-877-9400 407-877-9983 (Fax) jkwg1@earthlink.net
GENERAL CONTRACTOR	PAUL LYNCH ENTERPRISES, INC. PAUL LYNCH 35922 WILLOW WAY EUSTIS, FLORIDA 32736	352-589-5544 plynchei@me.com
ARCHITECT:	A. L. DESIGNS ALEXIS MCDANIEL 41411 ASPEN STREET EUSTIS, FLORIDA 32736	407-756-0830 aldesigns@icloud.com
SURVEYOR:	LONG SURVEYING, INC. 143 VILLA DE ESTE TERRACE #113 LAKE MARY, FLORIDA 32746	(407) 330-9717

LEGAL DESCRIPTION
LOT 10, BLOCK 2, TOMOKA ESTATES, ACCORDING TO THE PLAT THEREOF, AS RECORDED IN MAP BOOK 11, PAGE(S) 194-196, OF THE PUBLIC RECORDS OF VOLUSIA COUNTY, FLORIDA.

SITE DATA

SITE AREA = 37,338 SF = 0.86 ACRES

IMPERVIOUS AREA
EXISTING BLDG.= 5,064 SF
EXISTING ASPH. & CONC. = 18,069 SF
TOTAL EXISTING IMPERVIOUS AREA = 23,133 SF
PAVEMENT & BUILDING AREA TO BE DEMOLISHED = 17,357 SF
NET IMP. AREA BEFORE REDEVELOPMENT = 23,133-17,357 =5,776 SF

NEW PAVEMENT & SIDEWALK AREA =13,777 SF
NEW BUILDING AREA = 3,200 SF
TOTAL NEW IMPERVIOUS AREA = 16,977 SF

NET IMP. AREA AFTER REDEV. = 16,977 + 5,776 = 22,753 SF
TOTAL EXISTING IMPERVIOUS AREA = 23,133 SF
22,753 < 23,133 FOR A NET DECREASE OF 380 SF

INDEX OF SHEETS	
SHEET TITLE	No.
Cover Sheet	C1
Demolition Plan	C2
Geometry & Striping Plan	C3
Paving, Grading & Drainage Plan	C4
Water & Sewer Service Plan	C5
Lift Station Plan & Details	C6
City Standard Details	C7-C10
Irrigation Plan & Details	I1-I2
Landscape Plan & Details	L1-L2

Revised 9-15-15

JOHN R. KIRBY LICENSE No. 41957 STATE OF FLORIDA PROFESSIONAL ENGINEER

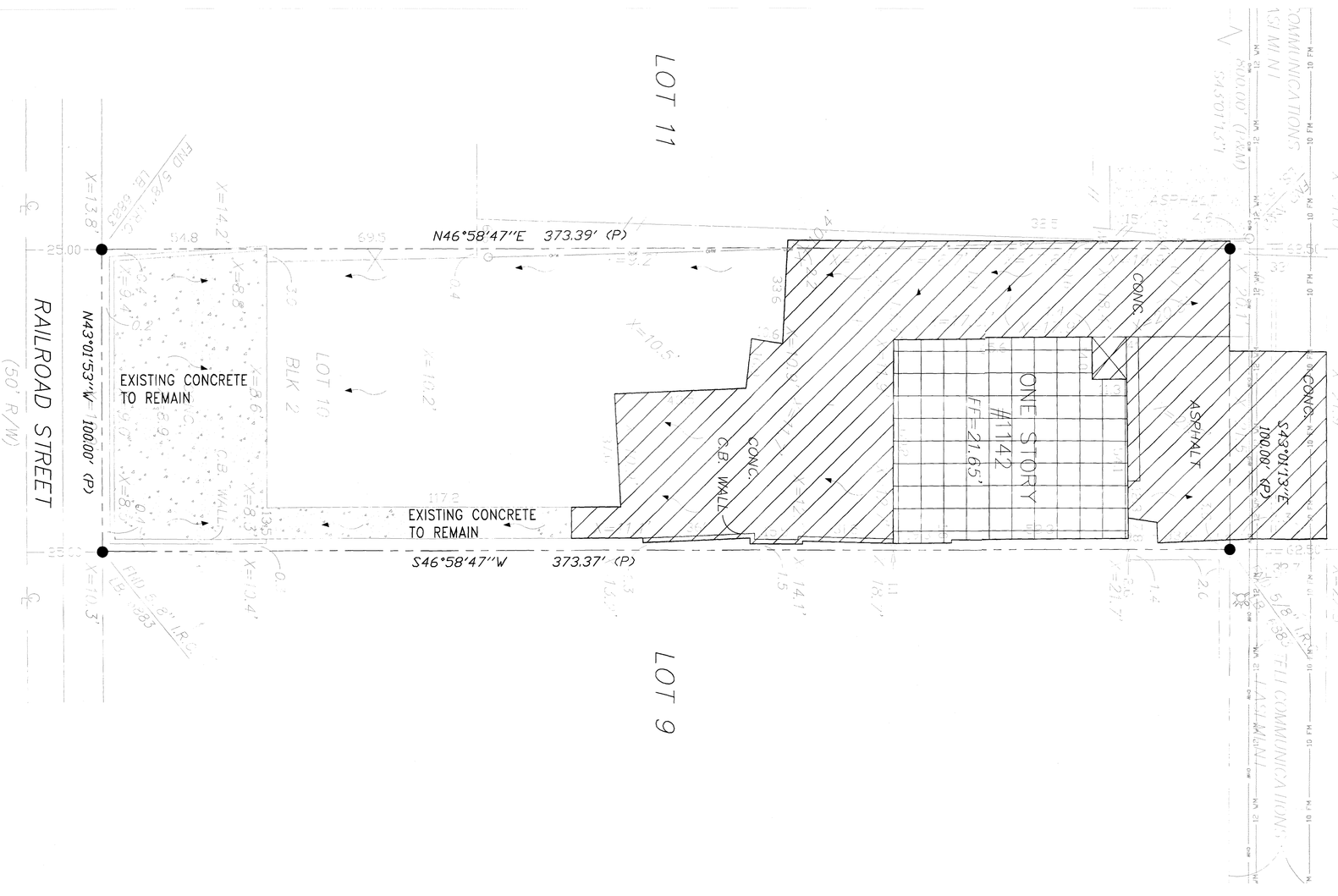

DEMOLITION NOTES

1. ALL DEMOLITION MATERIAL TO BE HAULED OFF-SITE AND DISPOSED OF IN A LEGAL MANNER.

2. NOTE: EXISTING BUILDING & PORTIONS OF PAVEMENT WERE REMOVED UNDER PREVIOUS RECENT DEMO PERMIT.

LEGEND	
Exist. Pavement & Wall to be Removed	
Exist. Building to be Removed	

City of Ormond Beach
FINAL APPROVAL
Site Plan Review Committee

NO.	DATE	REVISIONS

DEMOLITION PLAN FOR WINDOW WORLD

KIRBY ENGINEERING, L.L.C.
JOHN R. KIRBY, P.E.

JOHN R. KIRBY LICENSE No. 41957 STATE OF FLORIDA PROFESSIONAL ENGINEER

JK	DESIGNED
JK	DRAWN
4/23/15	DATE
C2	

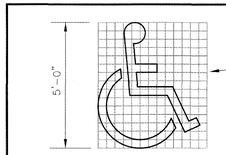

HANDICAPPED PAVEMENT SYMBOL

USE OF PAVEMENT SYMBOL IN HANDICAPPED PARKING SPACES IS REQUIRED. WHEN USED THE SYMBOL SHALL BE 5 FT. HIGH AND WHITE IN COLOR. TO BE INSTALLED IN ACCORDANCE WITH FDOT STANDARD INDEX #17346

NOTES:
1. ACCESSIBLE PARKING SPACES AND ACCESS AISLES SHALL BE LEVEL WITH SURFACE SLOPES NOT EXCEEDING 2.0% IN ALL DIRECTIONS.
2. IF ACCESSIBLE AISLE CROSSES THE TOP OF THE HANDICAP SPACE, WHEEL STOP SHALL BE USED TO MAINTAIN MINIMUM 44 INCH CLEAR ACCESSIBLE ROUTE.
3. IF WHEEL STOP IS USED, PARKING SHALL HAVE 18' CLEAR SPACE.
4. ACCESSIBLE PARKING SIGN SHALL BE PLACED AS TO NOT ENCROACH INTO THE ACCESSIBLE AISLE MINIMUM 44 INCH CLEAR ACCESSIBLE ROUTE.
5. NUMBER OF ACCESSIBLE PARKING SPACES SHALL MEET REQUIREMENT OF THE LATEST ISSUE OF THE FLORIDA ACCESSIBILITY CODE FOR BUILDING CONSTRUCTION

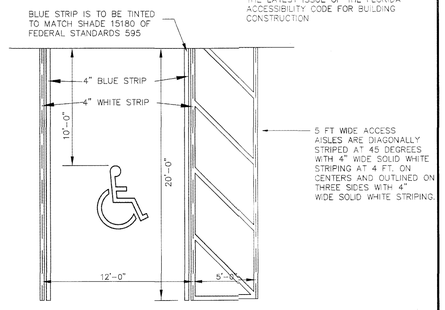

STANDARD CONSTRUCTION DETAIL	INDEX
TYPICAL MARKINGS FOR HANDICAPPED PARKING	M-12A
NTS	MARCH 2014

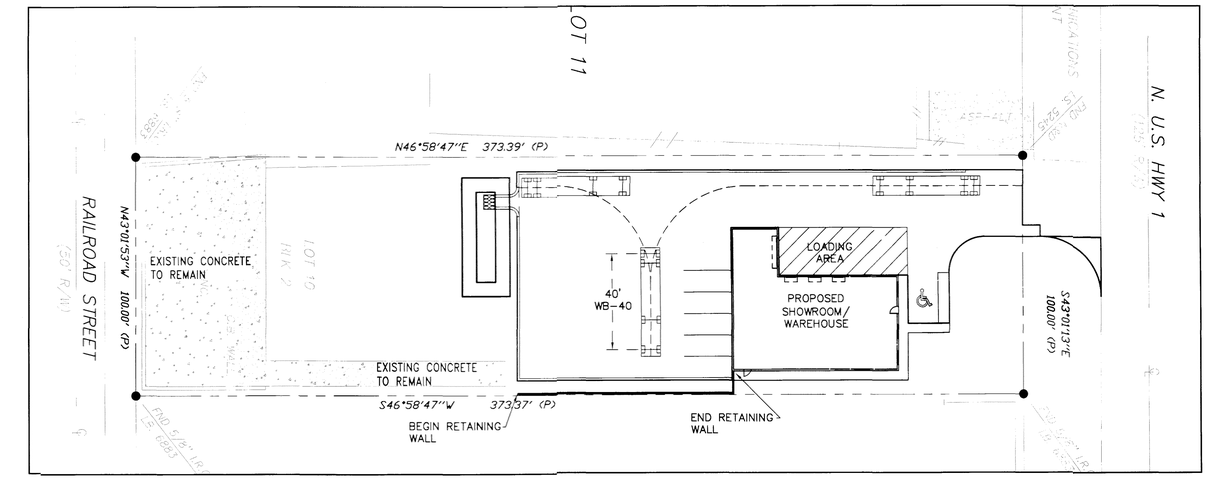

TRUCK TURNING MOVEMENT DIAGRAM

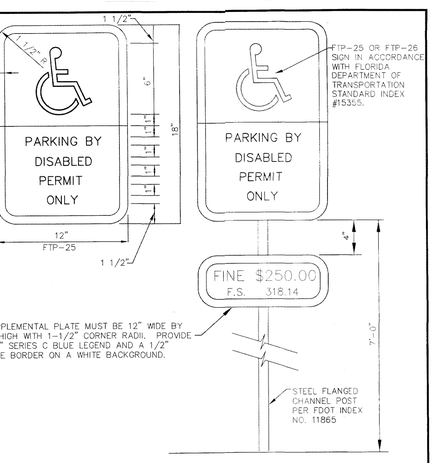

1.) TOP PORTION OF SIGN TO HAVE A REFLECTIVE BLUE BACKGROUND WITH WHITE REFLECTIVE SYMBOL AND BORDER.

2.) BOTTOM PORTION SHALL HAVE A REFLECTIVE WHITE BACKGROUND WITH BLACK OPAQUE LEGEND AND BORDER.

3.) SIGN MAY BE FABRICATED ON ONE PANEL OR TWO.

4.) SIGNS ARE TO BE MOUNTED AT STANDARD HEIGHT. (7' FROM PAVEMENT TO BOTTOM OF SIGN.)

STANDARD CONSTRUCTION DETAIL	INDEX
HANDICAP PARKING SIGN DETAIL	M-12B
NTS	MARCH 2014

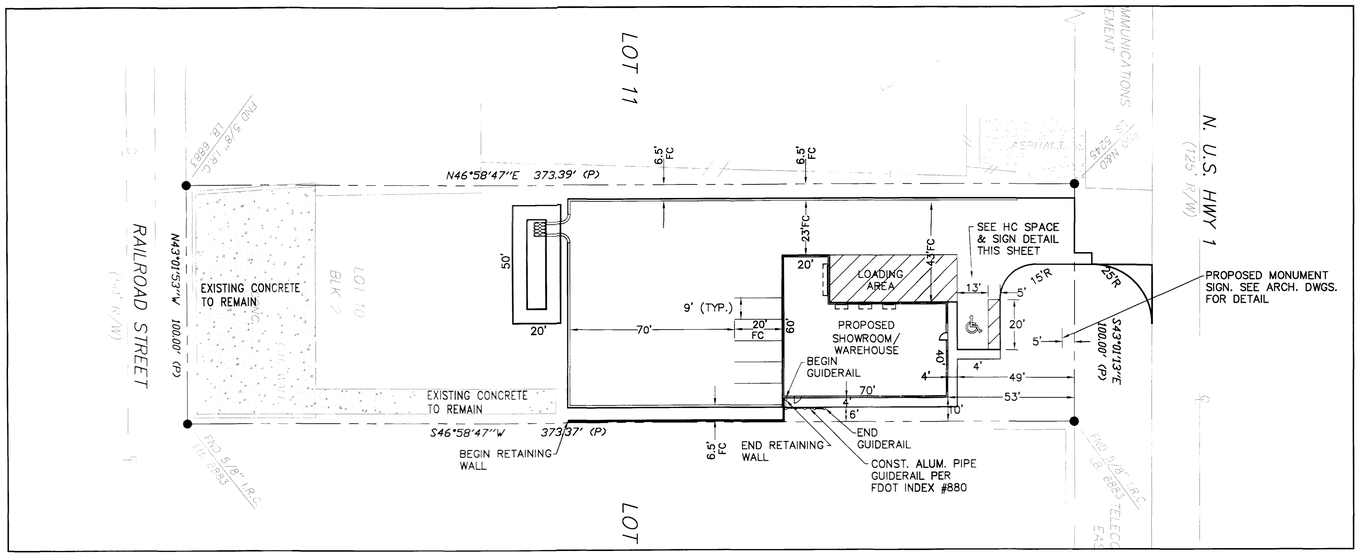

GEOMETRY & STRIPING PLAN

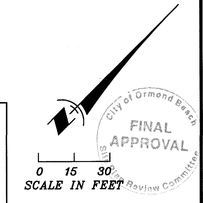

NO.	DATE	REVISIONS
1	4-6-15	Rev. per COB Comments
2	6-26-15	Rev. per COB-SPRC Comments

GEOMETRY & STRIPING PLAN FOR WINDOW WORLD

KIRBY ENGINEERING, L.L.C.
JOHN R. KIRBY, P.E.

JK DESIGNED
JK DRAWN
4/23/15 DATE
C3

JOHN R. KIRBY LICENSE No. 41957 STATE OF FLORIDA PROFESSIONAL ENGINEER

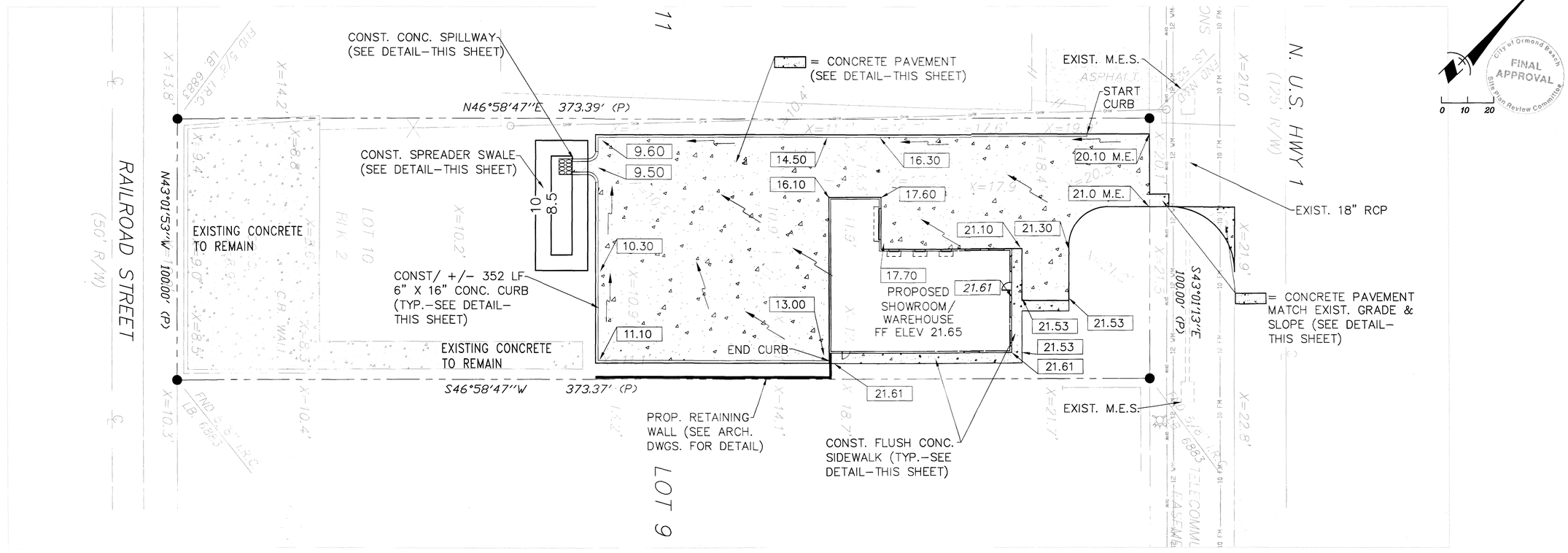

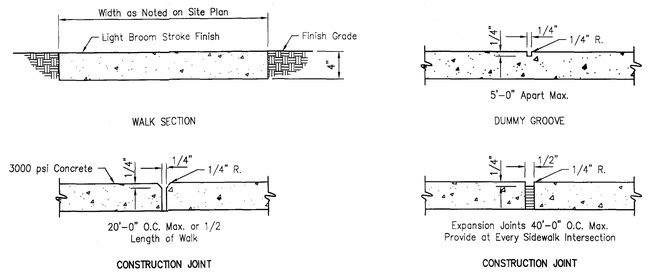

FLUSH SIDEWALK DETAILS

N.T.S.

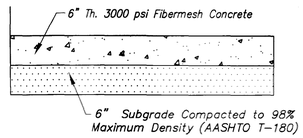

CONCRETE PVMT. SECTION

N.T.S.

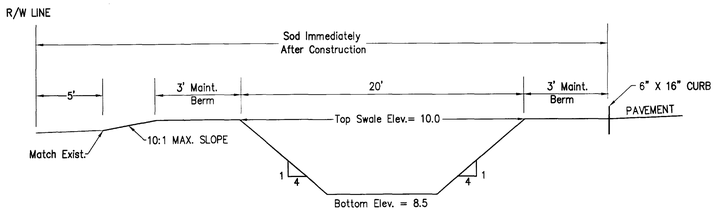

SPREADER SWALE DETAIL

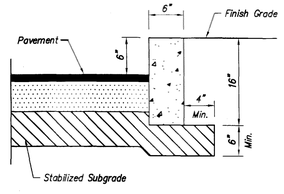

6" x 16" CURB DETAIL

N.T.S.

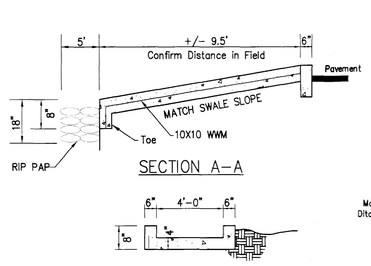

SECTION A–A

SECTION B–B

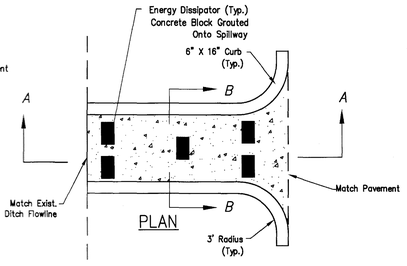

PLAN

NOTE: SPLILLWAY & CURB TO BE CONSTRUCTED OF 3000 PSI CONCRETE

CONCRETE SPILLWAY DETAIL

NTS

NO.	DATE	REVISIONS
1	6–26–15	Rev. per COB–SPRC Comments
2	9–15–15	Rev. per COB–SPRC Comments

PAVING, GRADING & DRAINAGE PLAN FOR WINDOW WORLD

KIRBY ENGINEERING, L.L.C.
JOHN R. KIRBY, P.E.

JK DESIGNED

JK DRAWN

4–23–15 DATE

C4

JOHN R. KIRBY LICENSE No. 41957 STATE OF FLORIDA PROFESSIONAL ENGINEER

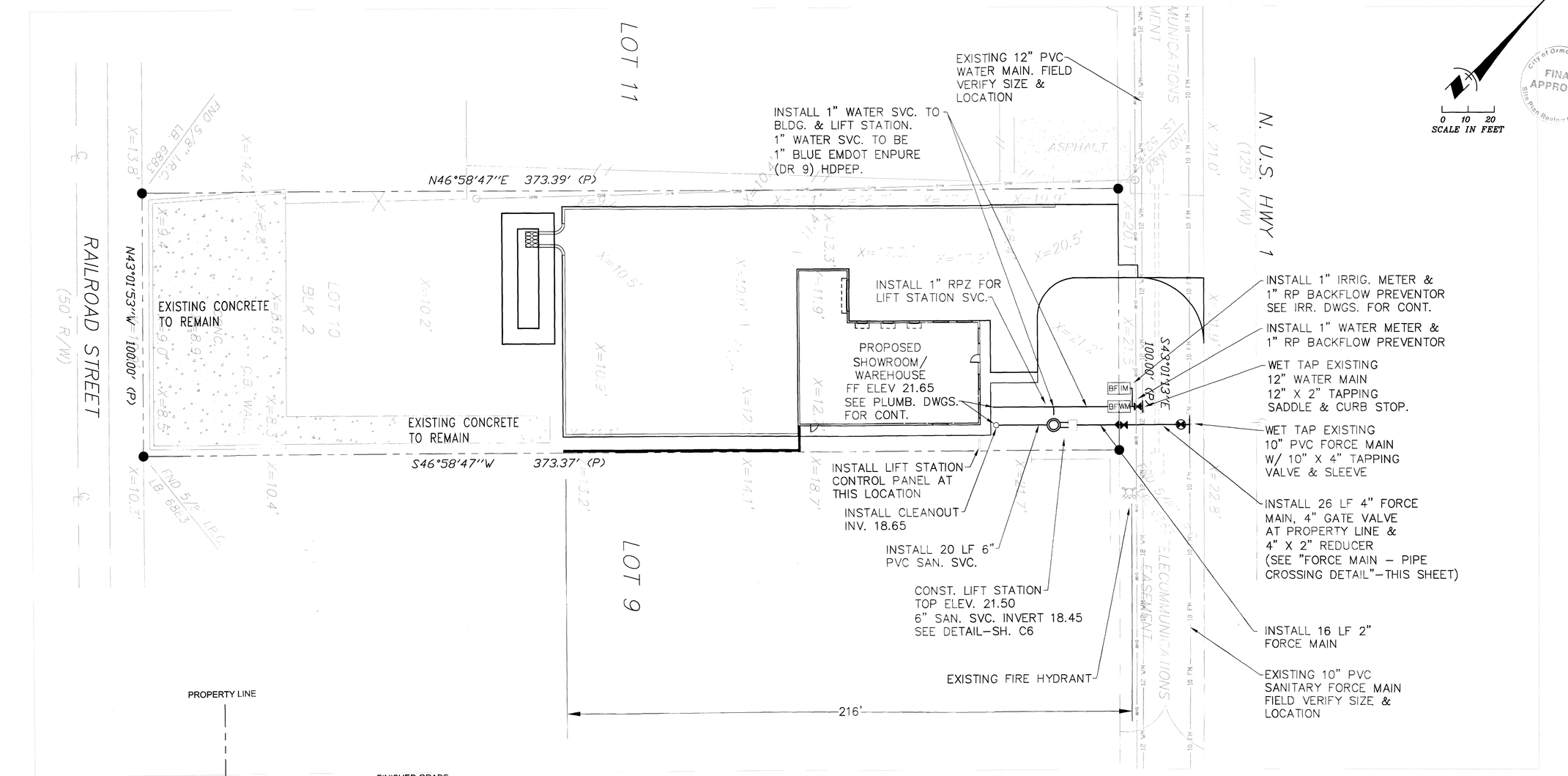

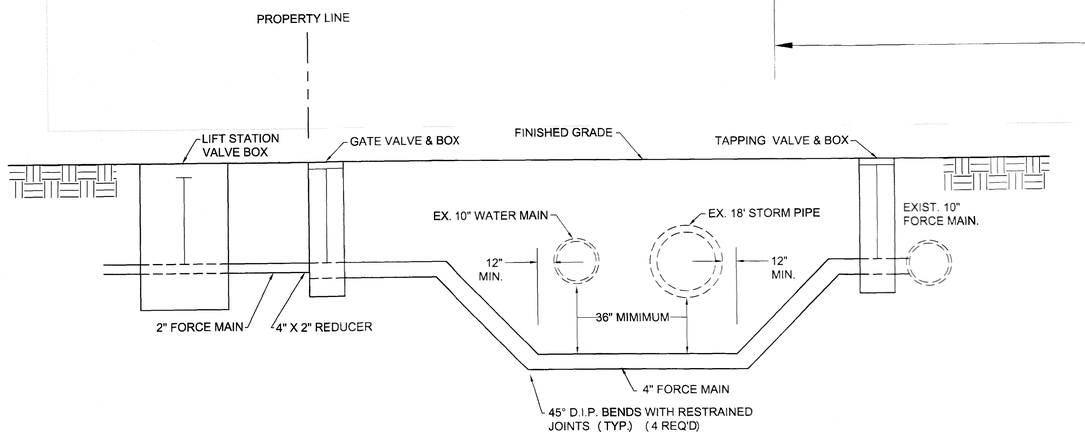

NOTE: ABOVE DETAIL TO BE UTILIZED IF CONTRACTOR CANNOT MAINTAIN 18" CLEAR BETWEEN MAINS BY DEFLECTING PIPE IN ACCORDANCE WITH MANUFACTURER'S RECOMMENDATIONS

FORCE MAIN – PIPE CROSSING DETAIL
NTS

Utility Notes

1. 1" Water Service Lines to be 1" Blue Emdot Enpure (DR 9) HDPEP.
2. 6" Sanitary Service to be Green PVC (SDR 26) .
3. 2" & 4" Sanitary Force main to be Green or White PVC 1120 (SDR 21) .

City of Ormond Beach FINAL APPROVAL Site Plan Review Committee

NO.	DATE	REVISIONS
1	6-26-15	Rev. per COB-SPRC Comments
2	9-15-15	Rev. per COB-SPRC Comments

WATER & WASTEWATER SERVICE PLAN FOR WINDOW WORLD

KIRBY ENGINEERING, L.L.C.
JOHN R. KIRBY, P.E.

JOHN R. KIRBY LICENSE No. 41957 STATE OF FLORIDA PROFESSIONAL ENGINEER

JK	DESIGNED
JK	DRAWN
4-23-15	DATE
C5	

CUSTOM PUMP & CONTROLS, INC.
2 H.P.PACKAGED FIBERGLASS LIFT STATIONS
PACKAGED FIBERGLASS VALVE BOXES
WITH D.E.P.CONTROL PANELS

JAX. (800) 940-3758 TAMPA (800) 940-3309

FURNISH AND INSTALL A COMPLETE PRE-PACKAGE CUSTOM PUMP & CONTROL GRINDER PUMP STATION AS DESCRIBED BELOW

SPECIFICATIONS
DESIGN CONDITIONS

MODEL	WGL20F-21	H.P.	2
VOLT	230	PHASE	1
DISCHARGE SIZE	2"	IMPELLER DIA.	N/A
GPM	20	TDH	74

PUMP
THE PUMP SHALL HAVE AN INTEGRALLY BUILT IN GRINDER UNIT AND SUBMERSIBLE TYPE MOTOR. THE PUMP SHALL BE SUSPENDED IN THE BASIN BY TWO (2) 1" GUIDE RAILS AND QUICK DISCONNECT LIFT OUT MOUNTING ASSEMBLY. SOLIDS SHALL BE FED BY AN UPFLOW DIRECTION TO THE GRINDER MECHANISM WITH NO OBSTRUCTIONS BELOW THE GRINDER INLET.

THE GRINDER UNIT SHALL BE CAPABLE OF CUTTING SOLID MATERIAL FOUND IN NORMAL DOMESTIC SEWAGE, INCLUDING REASONABLE AMOUNTS OF FOREIGN OBJECTS, SUCH AS WOOD, PLASTIC, GLASS, RUBBER, SANITARY NAPKINS, DISPOSABLE DIAPERS AND PANTY HOSE INTO A FINE SLURRY THAT WILL PASS FREELY THROUGH THE PUMP, SERVICE LINE AND FORCE MAIN.

MOTOR
THE PUMP MOTOR SHALL BE OF THE SUBMERSIBLE TYPE RATED FOR 2 HORSEPOWER AT 3450 RPM. MOTORS SHALL BE SINGLE PHASE 208/230 VOLT 60 HERTZ. / THREE PHASE 208/230/460 VOLT 60 HERTZ. SINGLE PHASE MOTORS SHALL BE OF THE CAPACITOR START-CAPACITOR RUN TYPE FOR HIGH STARTING TORQUE.

THE STATOR WINDING SHALL BE THE OPEN TYPE WITH CLASS A INSULATION RATED FOR 105° C MAXIMUM OPERATING TEMPERATURE. THE WINDING HOUSING WILL BE FILLED WITH CLEAR DIELECTRIC OIL THAT WILL LUBRICATE BEARINGS, SEALS AND TRANSFER HEAT FROM THE WINDINGS TO THE OUTER SHELL. THE MOTOR STATOR IS TO BE PRESSED INTO THE MOTOR HOUSING FOR OPTIMUM CONCENTRICITY AND ALIGNMENT, AND MAXIMUM HEAT TRANSFER.

THE MOTOR SHALL HAVE TWO BEARINGS TO SUPPORT THE ROTOR; AN UPPER BALL BEARING TO ACCOMMODATE THRUST LOADS AND A LOWER BALL BEARING TO TAKE RADIAL LOADS. BALL BEARINGS SHALL BE DESIGNED FOR A 9-10 LIFE CYCLONX HOUSED.

A HEAT SENSOR THERMOSTAT AND OVERLOAD SHALL BE ATTACHED TO THE TOP END OF THE MOTOR WINDINGS AND SHALL STOP THE MOTOR IF THE MOTOR WINDING TEMPERATURE REACHES 200° F. THE HIGH TEMPERATURE SWITCH WILL CAUSE THE PUMP TO CEASE OPERATION, SHOULD A CONTROL FAILURE CAUSE THE PUMP TO RUN IN A DRY WET WELL. THE THERMOSTAT SHALL RESET AUTOMATICALLY WHEN THE MOTOR COOLS TO A SAFE OPERATING TEMPERATURE.

SEAL CHAMBER
THE MOTOR SHALL BE PROTECTED BY TWO (2) ROTARY SHAFT SEALS MOUNTED IN TANDEM WITH AN OIL FILLED CHAMBER SEPARATING THE SEALS. THE SEALS SHALL HAVE CARBON AND CERAMIC SEAL FACES SPRINGS LAPPED TO A TOLERANCE OF ONE LIGHT BAND. METAL PARTS AND SPRINGS FOR SEALS SHALL BE STAINLESS STEEL. AN ELECTRICAL SENSING PROBE SHALL BE MOUNTED IN THE SEAL CHAMBER TO DETECT ANY WATER LEAKAGE PAST THE LOWER SEAL.

GRINDER ASSEMBLY & CONSTRUCTION
THE GRINDER ASSEMBLY SHALL CONSIST OF A ROTATING RADIAL CUTTER AND A STATIONARY SHREDDING RING, AND SHALL BE MOUNTED DIRECTLY BELOW THE VOLUTE PASSAGE. THE ROTATING CUTTER SHALL BE THREADED ONTO THE STAINLESS STEEL SHAFT AND SHALL BE LOCKED WITH A SCREW AND WASHER. THE STATIONARY SHREDDING RING SHALL BE PRESSED INTO AN IRON HOLDING FLANGE FOR EASY REMOVAL. THE FLANGE SHALL BE PROVIDED WITH TAPPED BACK-OFF HOLES SO THAT SCREWS CAN BE USED TO PUSH THE SHREDDING RING FROM THE HOUSING. BOTH THE RADIAL CUTTER AND SHREDDING RING SHALL BE EASILY REMOVABLE FROM THE OUTSIDE WITHOUT DISMANTLING PUMP OR REMOVAL FROM WET WELL. SUCH CONSTRUCTION THAT NO CLEARANCE ADJUSTMENT IS REQUIRED WHEN ASSEMBLING. ALL GRINDING OF SOLIDS SHALL BE DONE BY A HELICAL CUTTER ON THE RADIAL CUTTER AGAINST THE SHREDDING RING. THE RADIAL CUTTER AND SHREDDING RING SHALL BE OF 8440 STAINLESS STEEL HARDENED TO 58-60 ROCKWELL C.

PUMP IMPELLER
THE PUMP IMPELLER SHALL BE OF THE RECESSED TYPE TO PROVIDE AN OPEN UNOBSTRUCTED PASSAGE THROUGH THE VOLUTE FOR THE GROUND SOLIDS. THE IMPELLER SHALL BE CONSTRUCTED OF CAST IRON AND SHALL HAVE PUMP OUT VANES ON THE BACK SIDE OF THE IMPELLER TO KEEP SOLIDS FROM LOWER SEAL AND REDUCE PRESSURE AT THE SEAL FACES. IMPELLER SHALL BE THREADED ONTO THE STAINLESS STEEL SHAFT.

PUMP & MOTOR CASTINGS
ALL IRON CASTING SHALL BE OF HIGH TENSILE CAST IRON AND SHALL BE PROPERLY CLEANED, PRE-TREATED WITH CHROMIC RINSE, AND PAINTED WITH A HIGH QUALITY ENAMEL PAINT. ALL PUMP COMPONENTS THAT ARE NOT CAST IRON OR STAINLESS STEEL SHALL BE GALVANIZED OR PAINTED WITH BAKED-ON EPOXY. ALL FASTENERS SHALL BE STAINLESS STEEL.

WET WELL
SHALL BE A FILAMENT WOUND FIBERGLASS BASIN USING A COMMERCIAL GRADE OF GLASS FIBER HAVING A COUPLING AGENT WHICH WILL PROVIDE A SUITABLE BOND BETWEEN THE GLASS REINFORCEMENT AND THE RESIN. THE LAMINATE SHALL CONSIST OF AN INNER SURFACE, AN INTERIOR LAYER, AND AN EXTERIOR LAYER OF LAMINATE. THE INSIDE SURFACE SHALL BE SMOOTH AND FREE OF CRACKS AND CRAZING WITH A SMOOTH FINISH. SOME SURFACE DEFECTS IS PERMISSIBLE AS LONG AS THE SURFACE IS SMOOTH AND FREE OF PITS. BETWEEN 0600 AND 1000 INCHES OF RESIN-RICH SURFACE SHALL BE PROVIDED. THE BASIN SHALL BE PROVIDED WITH AN ANTI-FLOATATION RING TO PREVENT RISING. ENCAPSULATION WITH THE PROPER AMOUNT OF CONCRETE BALLAST. WETWELL PIPE SHALL BE AS PROVIDED BY CUSTOM PUMP & CONTROLS UTILIZING RESILIENT MOUNT PIPE CONNECTION ASSEMBLIES TO ALLOW FOR VARIATIONS IN SETTING PIPING ALIGNMENTS AND CHANGES FROM BACKFILLING AFTER SETTING. RIGID CAST IN PIPE FITTINGS OR FIBERGLASS RIGID HUBS WILL NOT BE CONSIDERED EQUAL OR ACCEPTABLE

VALVE BOX
SHALL BE CPC MODEL VB2624S FIBERGLASS VALVE BOX WITH A PAD LOCKABLE ALUMINUM VALVE BOX COVER. VALVE BOX SHALL BE PRE-PLUMBED USING ALL SCHEDULE 80 PVC PIPING AND FITTINGS, AND SHALL INCLUDE TWO (2), 3" SCHEDULE 80 PVC PISTON TYPE CHECK VALVES, AND THREE (3), 3" SCHEDULE 80 PVC GATE VALVES. ONE (1) 3" GATE VALVE IS SUPPLIED AS AN EMERGENCY PUMP-OUT). PVC PIPING IN VALVE BOX, AND WET WELL SHALL BE CONNECTED AND HELD IN PLACE BY CPC MODEL 36 RESILIENT MOUNT SEALING SYSTEM TO COMPENSATE FOR POSSIBLE UNEVEN SETTLING OF BASIN OR VALVE BOX.

ALUMINUM HATCH COVERS
SHALL BE FABRICATED FROM 1/4" ALUMINUM DIAMOND PLATE AND BUILT TO WITHSTAND A LOAD OF 150 LB. P.S.F.WITH STAINLESS STEEL BOLTS, NUTS AND HINGES - LOCKING STAPLE.

"NOTE"
BASIN AND VALVE BOX COMPLIES TO THE FOLLOWING STANDARDS:
ASTM D3753
ASTM D2582
AWWA C950

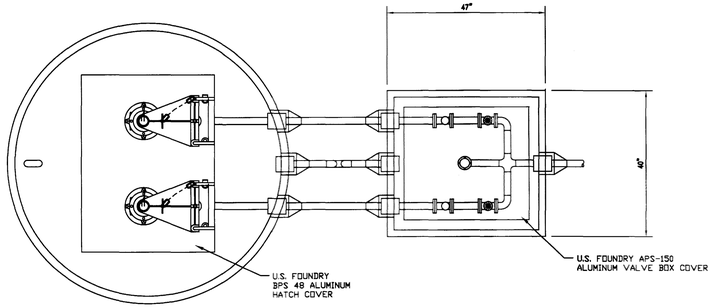

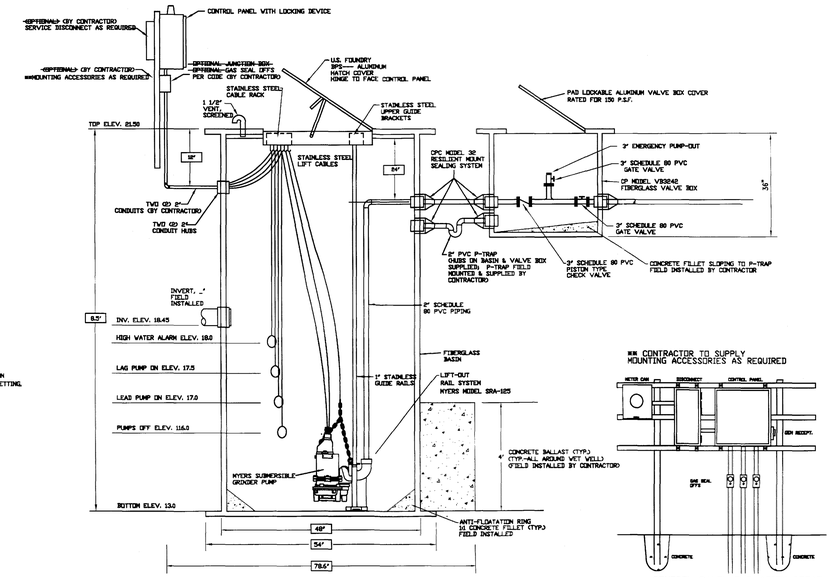

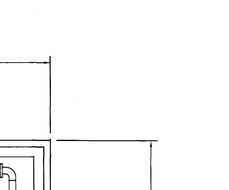

CONTROL PANEL ELEVATION DETAIL
NOT TO SCALE

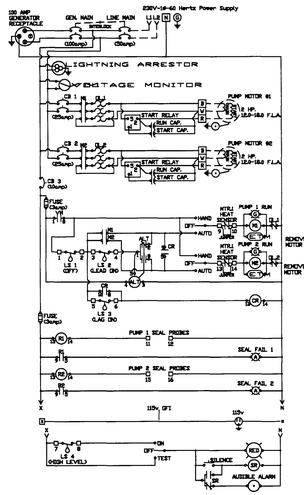

SINGLE PHASE SCHEMATIC

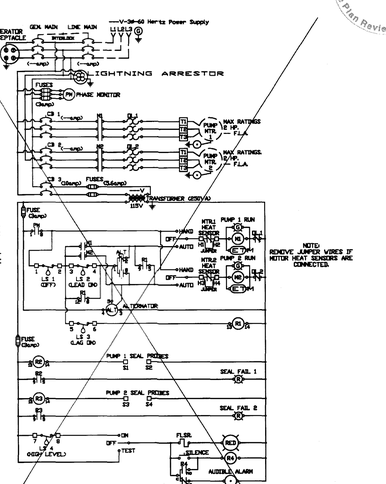

THREE PHASE SCHEMATIC

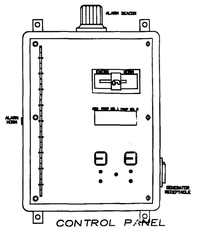

CONTROL PANEL

SPECIFICATIONS FOR DUPLEX D.E.P. TYPE CONTROL PANEL
PER D.E.P. REQUIREMENTS 62-604

EACH PANEL SHALL CONTROL TWO - 2 HP, 230 VOLT, 1 PHASE, 60 Hz PUMPS.

A NEUTRAL SHALL BE SUPPLIED TO THE PANEL FOR 120 VOLT CONTROL POWER ON SINGLE PHASE UNITS.

PANEL ENCLOSURE: ENCLOSURE SHALL BE NEMA 4X FABRICATED FROM FIBERGLASS

OUTER DOOR SHALL HAVE HINGES AND MEANS FOR PADLOCKING, INNER DEADFRONT DOOR SHALL BE 5052-H32 ALLOY ALUMINUM. ALL MOUNTING HOLES SHALL BE DRILLED AND TAPPED, SELF TAPPING SCREW NOT ACCEPTABLE. ALL BOLTS, NUTS, LOCK WASHERS, AND MACHINE SCREWS SHALL BE STAINLESS STEEL.

THE FOLLOWING MAJOR COMPONENTS ARE REQUIRED:

1) MAIN BREAKER
2) EMERGENCY BREAKER AND GENERATOR RECEPTACLE
3) PUMP BREAKERS
4) CONTROL CIRCUIT BREAKER
5) ALTERNATOR WITH ON-OFF SWITCH
6) HIGH LEVEL FLASHING ALARM LIGHT
7) HIGH LEVEL HORN ALARM WITH SILENCE - WHEN SILENCE LIGHT STAYS ON
8) LIGHTNING ARRESTOR
9) PHASE/UNDER VOLTAGE MONITORING RELAY IF 3 PHASE, UNDER VOLTAGE MONITORING RELAY IF SINGLE PHASE
10) MOTOR STARTERS WITH OVERLOAD PROTECTION
11) ELAPSE TIME METERS
12) CAPACITORS AND START-RELAYS AS APPROVED FOR MYERS PUMPS ON SINGLE PHASE SYSTEMS.
13) 115 VOLT RECEPTABLE

TYPICAL SEQUENCE OF OPERATION:

ON RISE LEVEL:

LOWEST FLOAT WILL CLOSE CIRCUIT TO RELAY. LEAD PUMP ON FLOAT CLOSES TO BRING LEAD PUMP ON. IF LEAD DOES NOT RECEDE AND CONTINUES TO RISE, THE LAG FLOAT WILL CLOSE AND BRING ON THE LAG PUMP. FURTHER RISING OF LEVEL IN WETWELL WILL CLOSE 4TH FLOAT (HIGH LEVEL) AND ACTIVATE THE HIGH LEVEL ALARM LIGHT AND HORN.

ON FALLING LEVEL:

ALL PUMPS WILL DE-ENERGIZE AT THE OPENING OF THE LOWEST (OFF) FLOAT

CONTROL PANEL SCHEMATIC IS TO BE AFFIXED TO THE INSIDE OF THE OUTER DOOR.

IN THE EVENT THE PUMPS BEING FURNISHED REQUIRE SEAL FAILURE COMPONENTS AND INDICATION TO VALIDATE WARRANTY, THESE COMPONENTS SHALL BE FURNISHED AS REQUIRED.

A 24 HOUR EMERGENCY TELEPHONE CONTACT SHALL BE DISPLAYED BY THE OWNER.

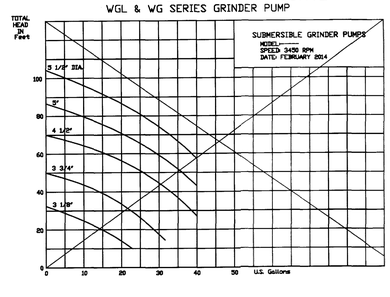

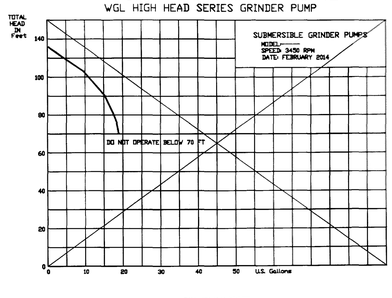

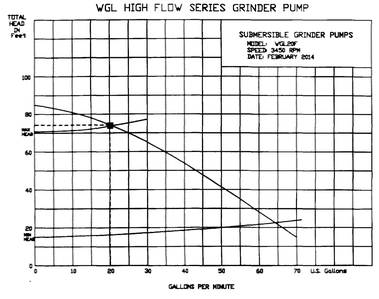

City of Ormond Beach
FINAL APPROVAL
Site Plan Review Committee

NO.	DATE	
1	6-26-15	Rev. per COB-SPRC Comments
2	9-15-15	Rev. per COB-SPRC Comments

LIFT STATION DETAILS & NOTES
WINDOW WORLD

KIRBY ENGINEERING, L.L.C.
JOHN R. KIRBY, P.E.

JK
DESIGNED

JK
DRAWN

4-23-15
DATE

C6

JOHN R. KIRBY LICENSE No. 41957 STATE OF FLORIDA PROFESSIONAL ENGINEER

SANITARY SEWER CONSTRUCTION GENERAL NOTES

1. THE CITY'S PUBLIC UTILITY DEPARTMENT SHALL BE NOTIFIED PRIOR TO BEGINNING ANY SEWER CONSTRUCTION.
2. ALL SANITARY SEWER MAIN LINES SHALL BE A MINIMUM OF 8" IN DIAMETER. SERVICE LATERALS SHALL BE A MINIMUM OF 4" DIAMETER (RESIDENTIAL) OR A MINIMUM OF 6" DIAMETER (COMMERCIAL)
3. ALL SANITARY SEWER LINES SHALL BE PVC SDR 26. IN PLACES WHERE A MINIMUM COVER OF 4.0' CANNOT BE MAINTAINED, C-900 GREEN PVC DR-25, CLASS 100 OR CONCRETE ENCASEMENT SHALL BE USED.
4. MINIMUM ALLOWABLE SANITARY SEWER SLOPES ALLOWED ARE:
   8" PIPE 0.40%
   10" PIPE 0.30%
   12" PIPE 0.22%
5. SEWER LINE CONSTRUCTION SHALL BE ACCOMPLISHED BY THE USE OF A LASER INSTRUMENT UNLESS ANOTHER METHOD IS PREVIOUSLY APPROVED BY THE CITY.
6. THE CONTRACTOR SHALL AT ALL TIMES, DURING PIPE LAYING, DEWATER THE GROUND SUFFICIENTLY TO KEEP THE GROUNDWATER ELEVATION A MINIMUM OF 6" BELOW THE PIPE BEING LAID WITHIN THE AREA OF THE TRENCH.
7. ALL PIPES SHALL BE LAID ON A FIRM FOUNDATION. SOFT OR SPONGY BEDDING FOR PIPES WILL NOT BE ACCEPTED. ANY UNSUITABLE MATERIAL SHALL BE REMOVED AND REPLACED WITH A DRY, COMPACTED, GRANULAR MATERIAL SATISFACTORY TO THE CITY.
8. EXCAVATION AND BACKFILL: THE CONTRACTOR SHALL PROVIDE ADEQUATE SHEETING AND BRACING OF EXCAVATION WORK OR USE OF TRENCH BOX IN ORDER TO PROVIDE FOR THE SAFETY OF WORKMEN, AS WELL AS REPRESENTATIVES OF THE CITY, THE DESIGN ENGINEER, AND THE DEVELOPER.
9. THE CONTRACTOR SHALL INSTALL A METALLIZED FOIL LOCATER TAPE, OR SIMILAR DEVICE AS MAY BE APPROVED BY THE CITY FOR THE FULL LENGTH OF ALL PVC WATER, RECLAIMED WATER AND SEWAGE FORCE MAINS. THIS PIPE LOCATER AID SHALL BE INSTALLED (15) INCHES BELOW FINISHED GRADE OR AS DIRECTED BY THE MANUFACTURER AND IS IN ADDITION TO THE LOCATER WIRE REQUIRED IN THE UTILITY PIPE LOCATION MATERIALS DETAIL (MISCELLANEOUS DETAILS SECTION – M10).
10. MANHOLES SHALL BE LOCATED AT INTERVALS NOT EXCEEDING 400 FEET.
11. MANHOLE RIMS SHALL MATCH FLUSH WITH THE FINISH GRADE ELEVATION IN PAVED AREAS AND A MINIMUM OF 0.2 FEET ABOVE GRADE IN UNPAVED AREAS.

STANDARD CONSTRUCTION DETAIL GENERAL NOTES SANITARY SEWER CONSTRUCTION	INDEX S-1A MARCH 2014

SANITARY SEWER CONSTRUCTION GENERAL NOTES

12. THE CONTRACTOR SHALL CONSTRUCT SANITARY SEWER MANHOLES IN SUCH A WAY THAT SEWER LINES DO NOT INTERSECT SEALED JOINTS BETWEEN SECTIONS OF THE MANHOLE.
13. RUBBER BOOTS AND STAINLESS STEEL BANDS SHALL BE UTILIZED IN THE CONNECTION OF THE SEWER MAIN TO THE MANHOLES (SEE RUBBER BOOT AND PRECAST JOINT CONNECTION DETAIL).
14. NO DOGHOUSE TYPE MANHOLES ARE PERMITTED WITHIN THE CITY OF ORMOND BEACH
15. INDIVIDUAL SANITARY SERVICE CONNECTORS ON NEW CONSTRUCTION SHALL NOT BE CONNECTED DIRECTLY INTO MANHOLES, BUT TO SEWER MAIN LINES BY USE OF WYE CONNECTIONS.
16. FOR SINGLE FAMILY HOMES, SINGLE FOUR INCH SEWER SERVICES SHALL BE CONSTRUCTED AT EACH LOT OR UNIT AND LOCATED ON THE DOWNSTREAM SIDE OF THE LOT CENTER LINE. THESE SERVICES SHALL BE EXTENDED 4 FEET ABOVE GROUND AT THE PROPERTY LINE WITH A PVC RISER AND PLUG BEING EASILY VISIBLE FROM THE ROAD. RUBBER SEAL FITTINGS TO BE USED ON ALL LINES, NO GLUED JOINTS.
17. FOR MULTI-FAMILY AND COMMERCIAL SITES, SIX INCH MINIMUM SEWER SERVICES AND CLEANOUTS SHALL BE PROVIDED AS APPROVED BY THE CITY.
18. SANITARY SEWER LATERALS LONGER THAN 70 FEET, MEASURED FROM THE SEWER MAIN TO THE RIGHT-OF-WAY LINE MAY BE APPROVED ON A CASE BY CASE BASIS. SUCH LATERALS SHALL BE D.I.P. EPOXY LINED OR C-900 PVC.
19. SANITARY SEWER MANHOLES WHICH HAVE SEWER FORCE MAINS DISCHARGING DIRECTLY INTO THEM, OR ANY MANHOLE WITHIN 200 FEET OF A LIFT STATION, SHALL BE FIBERGLASS OR PVC LINED. RETRO-FITTING OF MANHOLES WITH LINERS SHALL BE REQUIRED WHEN NEW CONNECTIONS SUCH AS THIS ARE MADE. FIBERGLASS SHALL BE A MINIMUM 1/2" THICKNESS UNLESS APPROVED OTHERWISE BY THE CITY. LINING SHALL BE AGRU SURE-GRIP OR PRE-APPROVED EQUAL.
20. SEE CHART ON DETAIL INDEX S-1C FOR FORCE MAIN AND REUSE PIPE SIZE AND MATERIALS.
21. THE CITY OF ORMOND BEACH REQUIRES THE DEVELOPER TO TELEVISE ANY AND ALL SANITARY SEWER MAIN LINES AND LATERALS PRIOR TO ANY FINAL ACCEPTANCE, AND RESERVES THE RIGHT TO REQUEST WATER AND AIR TESTING.
22. ALL SEWER MAINS PRIOR TO ACCEPTANCE BY THE CITY SHALL BE TELEVISED BY A REPUTABLE COMPANY THAT ENGAGES IN THIS TYPE OF WORK. THE DVD SHALL BE NON-STOP WITH AUDIO DESCRIBING WHAT IS BEING REVIEWED. WRITTEN DVD LOGS DESCRIBING THE CONDITION OF THE LINES SHALL ACCOMPANY THE DVD SUBMISSION TO THE CITY.
23. CONTRACTORS SHALL BE REQUIRED TO TELEVISE ALL SEWER LINES IN THE PRESENCE OF CITY PERSONNEL AND PROVIDE COPIES OF THE DVD TO THE PUBLIC UTILITY DEPT. ANY DEFECTS NOTED SHALL BE CORRECTED PRIOR TO ACCEPTANCE BY THE CITY.

STANDARD CONSTRUCTION DETAIL GENERAL NOTES SANITARY SEWER CONSTRUCTION	INDEX S-1B MARCH 2014

SANITARY SEWER CONSTRUCTION GENERAL NOTES

24. ALL MANHOLES CONSTRUCTED IN SIDE YARDS, BACKYARDS, AND EASEMENTS OFF THE RIGHT-OF-WAY SHALL BE OUTFITTED WITH FIBERGLASS LINERS OR OTHER TYPES OF LINERS OR COATINGS APPROVED BY THE CITY. IN ADDITION THE CITY MAY REQUIRE LINERS OR COATINGS TO BE INSTALLED IN OTHER AREAS WHERE THE PUBLIC UTILITY DEPARTMENTS BELIEVE THE NEED IS JUSTIFIED.
25. ALL SEWER LINES WHICH ARE CONSTRUCTED OFF PUBLIC RIGHTS-OF-WAY WITHIN SIDEYARDS, BACKYARDS, AND OTHER POORLY ACCESSIBLE AREAS SHALL BE CONSTRUCTED OF C-900 PVC OR EPOXY LINED DUCTILE IRON PIPE. ABSOLUTELY NO USE OF PLASTIC STYRENE FITTINGS SHALL BE ALLOWED.
26. SEWER LATERAL LOCATIONS SHALL BE MARKED ALONG THE OUTSIDE OF THE CURB WITH A SAW CUT V OR BY A METAL TAB SET INTO THE PAVEMENT.
27. EZ-WRAP PLASTIC, AS MANUFACTURED BY PRESS-SEAL GASKET CORPORATION OR APPROVED EQUAL, SHALL BE USED ON THE OUTSIDE OF ALL MANHOLE AND WET WELL JOINTS. APPLY ONE LAYER OF 9" WRAP CENTERED ON EACH JOINT. A CITY INSPECTOR SHALL PERSONALLY INSPECT ALL JOINT SEALS PRIOR TO BACKFILLING OPERATIONS.
28. ALL PROPOSED SEWER MAINS, 4" OR GREATER, SHALL BE FLUSHED AND CLEANED WITH A POLY PIG IN ACCORDANCE WITH LATEST AWWA STANDARDS AND THE FLORIDA DEPARTMENT OF ENVIRONMENTAL PROTECTION REQUIREMENTS.
29. ALL SEWER MAINS SHALL HAVE A MINIMUM COVER OF 36 INCHES. IN SPECIAL CASES WHERE IT IS IMPOSSIBLE OR INAPPROPRIATE TO PROVIDE ADEQUATE COVER, DUCTILE IRON CLASS 350 OR CONCRETE ENCASEMENT MAY BE USED AS APPROVED BY THE CITY.
30. SEWER SYSTEMS SHALL BE PRESSURE TESTED AT 100 PSI STATIC PRESSURE FOR A PERIOD OF 2 HOURS PER AWWA STANDARDS. TESTS SHALL BE CONDUCTED BEFORE FINAL PAVING AND IN THE PRESENCE OF THE CITY'S INSPECTOR.

FORCE MAIN & REUSE MAIN STANDARDS		
DIAMETER	MATERIAL	STANDARD
2" – 4"	PVC 1120 / SDR 21	ASTM D 2241
> 4" – 12"	PVC 1120 / CLASS 100	AWWA C 900
14" – 36" (16"– 24" — DR – 18) (30"– 36" — DR – 21)	PVC 1120	AWWA C 905
ALL SIZES	HDPE (DIPS) DR 13.5	ASTM F 714

NOTE: PVC PIPE COLOR SHALL BE GREEN OR WHITE FOR SEWER FORCE MAIN, AND PURPLE FOR REUSE MAIN.

STANDARD CONSTRUCTION DETAIL GENERAL NOTES SANITARY SEWER CONSTRUCTION	INDEX S-1C MARCH 2014

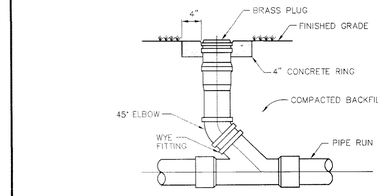

IN-LINE CLEANOUT

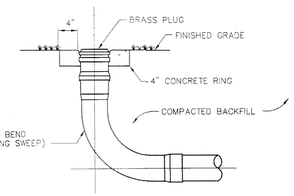

TERMINAL CLEANOUT

NOTE: CONCRETE COLLAR REQUIRED IN UNPAVED AREAS

STANDARD CONSTRUCTION DETAIL CLEANOUT DETAIL NTS.	INDEX S-7 MARCH 2014

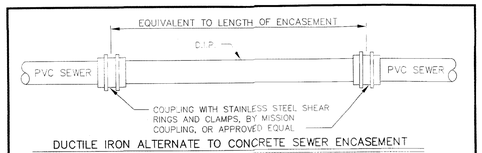

DUCTILE IRON ALTERNATE TO CONCRETE SEWER ENCASEMENT

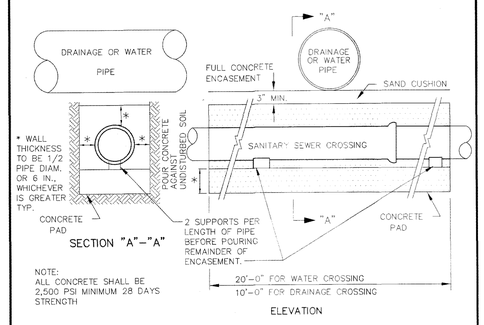

SECTION "A"–"A"

NOTE:
ALL CONCRETE SHALL BE 2,500 PSI MINIMUM 28 DAYS STRENGTH

ELEVATION

WATER MAIN SHALL BE LOCATED ABOVE ENCASEMENT AS SHOWN ON PLANS OR DETERMINED IN THE FIELD. USE ENCASEMENT WHERE VERTICAL CLEARANCE BETWEEN WATER MAIN AND SEWER IS LESS THAN 18 INCHES.

STANDARD CONSTRUCTION DETAIL SANITARY SEWER CROSSING NTS.	INDEX S-8 MARCH 2014

City of Ormond Beach
FINAL APPROVAL
Site Plan Review Committee

NO.	DATE	REVISIONS

SANIATARY SEWER SYSTEM DETAILS & NOTES WINDOW WORLD

KIRBY ENGINEERING, L.L.C.
JOHN R. KIRBY, P.E.

JK
DESIGNED

JK
DRAWN

3-12-15
DATE

C7

JOHN R. KIRBY LICENSE No. 41957 STATE OF FLORIDA PROFESSIONAL ENGINEER

GENERAL NOTES
WATER SYSTEM CONSTRUCTION

1. THE CITY'S PUBLIC UTILITIES DEPARTMENT SHALL BE NOTIFIED PRIOR TO BEGINNING ANY WATER SYSTEM CONSTRUCTION.
2. DEWATERING SHALL BE PROVIDED TO KEEP GROUNDWATER ELEVATION A MINIMUM OF 6 INCHES BELOW WATER MAIN BEING LAID.
3. ALL WATER MAINS SHALL BE LAID ON A FIRM FOUNDATION WITH ALL UNSUITABLE MATERIAL (MUCK, ROCK, COQUINA, ETC.) REMOVED AND REPLACED WITH CLEAN GRANULAR MATERIAL.
4. TRENCHES SHALL BE BACKFILLED WITH CLEAN GRANULAR MATERIAL IN MAX. 1' LIFTS WITH A MINIMUM COMPACTION OF 98 PERCENT (AASHTO-T180) IN PAVED AREAS AND 90 PERCENT IN UNPAVED AREAS.
5. IT SHALL BE THE CONTRACTOR'S RESPONSIBILITY TO ENSURE THAT TRENCH COMPACTION TESTS BE PROVIDED AT POINTS 1 FOOT ABOVE THE PIPE AND AT 1 FOOT VERTICAL INTERVALS TO FINISH GRADE, AT A MINIMUM SPACING OF EVERY 300 FEET, AND TO FURNISH COPIES OF TEST REPORTS PROMPTLY TO THE CITY INSPECTOR.
6. METALLIZED PIPE LOCATION TAPE SHALL BE LOCATED 15 INCHES BELOW FINISHED GRADE OR AS SPECIFIED BY MANUFACTURER FOR ALL PVC LINES. MARKER TAPE SHALL BE USED ON ALL DUCTILE IRON PIPE.
7. WATER SERVICES (SINGLE 1") SHALL BE POLYETHYLENE TUBING (BLUE IN COLOR) ; POLYBUTYLENE SHALL NOT BE ALLOWED.
8. ALL WATER SERVICE ENDINGS SHALL BE MARKED WITH 4" X 4" LUMBER (PRESSURE TREATED) EXTENDING 4 FEET ABOVE GRADE, WITH WATER SERVICES SECURED 24" ABOVE THE GROUND. WIRE TIES SHALL BE USED TO SECURE THE CURB STOPS TO SUPPORT POSTS.
9. WATER VALVES SHALL BE PLACED AT ALL STREET INTERSECTIONS AND AT MAXIMUM SPACING OF 500 FEET.
10. AT ALL WATER MAIN TEES AND CROSSES, VALVES SHALL BE INSTALLED ON ALL LEGS EXCEPT ONE.
11. APPROVED WATER VALVE TYPES ARE THE FOLLOWING:
    A. STANDARD GATE VALVES LESS THAN 48" DIAMETER RESILIENT SEAT GATE VALVES (AWWA C-509 OR C-515).
    B. TAPPING VALVES AND MECHANICAL TAPPING SLEEVE SHALL BE STAINLESS STEEL. (AWWA C – 509)

STANDARD CONSTRUCTION DETAIL
GENERAL NOTES
WATER SYSTEM CONSTRUCTION
INDEX W-1A
MARCH 2014

GENERAL NOTES
WATER SYSTEM CONSTRUCTION

12. ALL WATER VALVE BOXES SHALL BE ADJUSTED TO FINISH GRADE AND THE LIDS PAINTED BLUE TO MAKE THEM PLAINLY VISIBLE.
13. WATER VALVES SHALL BE COMPLETELY OPENED BY THE CONTRACTOR UPON FINAL ACCEPTANCE OF NEW WATER SYSTEMS IN THE PRESENCE OF UTILITY DEPARTMENT PERSONNEL.
14. HYDRANTS SHALL BE PLACED AT 500 FEET MAXIMUM SPACING IN RESIDENTIAL DEVELOPMENTS AND AT 300 FEET MAXIMUM SPACING IN BUSINESS AND INDUSTRIAL DEVELOPMENTS. ALL WATER MAIN TO WHICH HYDRANTS ARE CONNECTED SHALL BE 8 INCHES MINIMUM.
15. ALL FIRE HYDRANTS SHALL BE CONSTRUCTED TO MAKE THEM EASILY ACCESSIBLE TO FIRE PERSONNEL IN CASE OF FIRE. THE MAIN NOZZLE CONNECTION SHOULD ALWAYS FACE THE STREET AND BE 18-24" ABOVE GRADE.
16. AS STANDARD PRACTICE, WATER MAINS SHALL BE INSTALLED 4 FEET OFF THE BACK OF CURB OR AS APPROVED BY THE CITY.
17. ALL WATER MAINS SHALL BE NSF-APPROVED FOR POTABLE WATER USE, AND SHALL HAVE A MINIMUM COVER OF 36 INCHES. IN SPECIAL CASES WHERE IT IS IMPOSSIBLE OR INAPPROPRIATE TO PROVIDE ADEQUATE COVER, DUCTILE IRON CLASS 350 OR CONCRETE ENCASEMENT MAY BE USED AS APPROVED BY THE CITY.
18. ALL PROPOSED WATER MAINS SHALL BE FLUSHED, CLEANED WITH A POLY PIG, DISINFECTED AND BACTERIOLOGICALLY CLEARED FOR SERVICE IN ACCORDANCE WITH LATEST AWWA STANDARDS AND THE FLORIDA DEPARTMENT OF ENVIRONMENTAL PROTECTION REQUIREMENTS.
19. WATER MAINS SHALL BE AWWA C-900 CL 150, OR D.I.P. CLASS 350 STANDARD CEMENT LINED.
20. UPON CONSTRUCTION COMPLETION AND ACCEPTANCE OF THE SYSTEM, IT SHALL BE THE DESIGN ENGINEER'S RESPONSIBILITY TO ENSURE THAT THE SYSTEM IS PROPERLY CERTIFIED AND ACCEPTED BY THE HEALTH DEPARTMENT, AND THAT CERTIFIED AS-BUILT DRAWINGS (24"x36") ARE PROVIDED TO THE CITY PRIOR TO PAVING AND ANY USE OF THE SYSTEM. PROVIDE THREE (3) BLUELINE COPIES, ONE (1) MYLAR OF AS-BUILT DRAWINGS AND A DIGITAL COPY.
21. MEGALUG OR EQUIVALENT, RESTRAINED JOINT SYSTEM MAY BE USED ON ALL RESTRAINED FITTINGS, VALVES, ETC. MINIMUM DEPTH OF BURY ON PIPES NOT MEETING REQUIRED COVER REQUIREMENTS SHALL FOLLOW THE MOST RECENT DIPRA THRUST RESTRAINT DESIGN GUIDELINES.

STANDARD CONSTRUCTION DETAIL
GENERAL NOTES
WATER SYSTEM CONSTRUCTION
INDEX W-1B
MARCH 2014

GENERAL NOTES
WATER SYSTEM CONSTRUCTION

22. WATER SYSTEMS SHALL BE PRESSURE TESTED AT 150 PSI STATIC PRESSURE FOR A PERIOD OF 2 HOURS PER AWWA STANDARDS. TESTS SHALL BE CONDUCTED BEFORE FINAL PAVING AND IN THE PRESENCE OF THE CITY'S INSPECTOR.
23. ALL WATER SERVICES SHALL BE MARKED WITH A "Λ" SAW CUT INTO THE CURB OR BY METAL TABS SET INTO THE PAVEMENT.
24. ALL WATER VALVES AND BLOW-OFFS SHALL BE MARKED WITH AN "X" SAW CUT INTO THE CURB OR BY METAL TABS SET INTO THE PAVEMENT. LOCATION OF METAL TABS IN INCHES FROM EDGE OF PAVEMENT SHALL EQUAL DISTANCE IN FEET FROM EDGE OF PAVEMENT TO VALVE.
25. UNIFLANGE 1300 SERIES PIPE RESTRAINTS AS MANUFACTURED BY FORD OR APPROVED EQUAL MAY BE USED AS APPROPRIATE FOR RESTRAINING IN-LINE PRESSURE PIPE EACH SIDE OF PIPE JOINT, AS REQUIRED BY RESTRAINT TABLE.
26. TRACING WIRE SHALL BE INSTALLED IN ACCORDANCE WITH UTILITY PIPE LOCATION MATERIALS DETAIL.
27. NO GALVANIZED PIPE, FITTINGS, ETC. ARE ACCEPTED.
28. ALL WATER METERS SHALL BE INSTALLED AT THE RIGHT OF WAY LINE ONLY REGARDLESS OF SIZE.
29. SUBMIT ASSEMBLY CERTIFICATION FOR ALL BACKFLOW PREVENTERS TO THE CITY'S ENGINEERING DEPARTMENT BEFORE FINAL INSPECTION.
30. PIPING FOR RAW WATER SHALL BE OLIVE GREEN FOR ABOVE GROUND PIPING, BURIED PVC PIPING SHALL BE BLUE WITH WHITE COLOR BACKGROUND LOCATOR TAPE PLACED DIRECTLY ON TOP OF THE PIPE AND AT 12" TO 18" ABOVE THE PIPE. THE TAPE SHALL CONTINUOUSLY READ "CAUTION – RAW WATER MAIN BURIED BELOW" OR WHITE WITH LOCATOR TAPE PLACED 12" TO 18" ABOVE THE TOP OF THE PIPE.
31. SEE CHART BELOW FOR WATER MAIN SIZE AND MATERIALS.

MATERIALS		
DIAMETER	MATERIAL	STANDARD
2" – 4"	PVC 1120 / SDR 21	ASTM D 2241
> 4" – 12"	PVC 1120 / CLASS 150	AWWA C 900
> 4" – 12" DEDICATED FIRE LINE	PVC 1120 / CLASS 150	AWWA C 900
(16" – 24" — DR = 18) (30"– 36" — DR = 21)	PVC 1120	AWWA C 905
ALL SIZES	HDPE DIPS OR 11	ASTM F 714

NOTE: PVC PIPE COLOR SHALL BE BLUE FOR POTABLE WATER MAINS, BLUE WITH WHITE LOCATOR TAPE OR WHITE WITH WHITE LOCATOR TAPE FOR RAW WATER MAIN.

STANDARD CONSTRUCTION DETAIL
GENERAL NOTES
WATER SYSTEM CONSTRUCTION
INDEX W-1C
MARCH 2014

VALVE SCHEDULE (FORD OR EQUIVALENT)	
WATER SERVICES	
VALVES AT MAIN	
1"	F1000-4
1 1/2" (REQ. C84-66 PACK JOINT COUPLING)	B81-666
2" (REQ. C84-77 PACK JOINT COUPLING)	B81-777
VALVES AT METER	
1"	B94-324W
1 1/2"-2"	BF43-777W

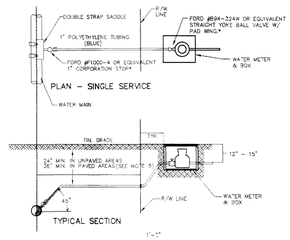

NOTES:

1. HDPE SHALL BE 200 PSI, NSF APPROVED, SDR 9, MEETING ASTM D1248. TUBING SHALL BE ENDOT ENDOTRACE (OR APPROVED EQUAL).
2. REDUCED PRESSURE BACKFLOW PREVENTERS ARE REQUIRED FOR ALL COMMERCIAL SERVICES. TO BE INSTALLED BY A CERTIFIED TECHNICIAN AT OWNERS EXPENSE.
3. ALL SERVICE TAPS SHALL BE NO CLOSER THAN 2'-10" STAGGERED INTERVAL OR WITHIN 2'-0" OF BELL OR SPIGOT ENDS.
4. METERS 3" AND LARGER SHALL BE PLACED IN A VAULT TO BE CONSTRUCTED BY DEVELOPER IN ACCORDANCE WITH ARTICLE 4.04B4 LDC.
5. IN AREAS TO BE PAVED PROVIDE A 2" MIN. PVC SCHEDULE 40 SLEEVE FOR RE-TUBING. SLEEVE SHALL BE EXTEND A MIN. OF 2' BEHIND BACK OF CURB AT EACH SIDE OF ROAD.
6. ALL IRRIGATION SERVICES (WATER) MUST HAVE AN APPROVED BACKFLOW PREVENTION DEVICE INSTALLED ON CUSTOMERS SIDE OF WATER METER. THE CUSTOMER IS RESPONSIBLE FOR INSTALLATION AND CERTIFICATION COST. A COPY OF THE CERTIFICATION MUST BE SENT TO THE CITY OF ORMOND BEACH ENGINEERING DEPARTMENT, PRIOR TO FINAL INSPECTION
7. WATER METERS INSTALLED IN AREAS SERVED BY RECLAIMED WATER OR AN ALTERNATE IRRIGATION SUPPLY SHALL BE EQUIPPED WITH DUAL CHECK BACKFLOW PREVENTERS.
7. WATER METERS SHALL BE RADIO READ.

STANDARD CONSTRUCTION DETAIL
WATER LATERAL SERVICE
5/8", 3/4", 1", 1-1/2", 2" METERS
NTS
INDEX W-3
MARCH 2014

ACCEPTABLE MANUFACTURERS: HERSEY MODEL FRP II, WILKINS MODEL 975XL, WATTS MODEL 009 QTS

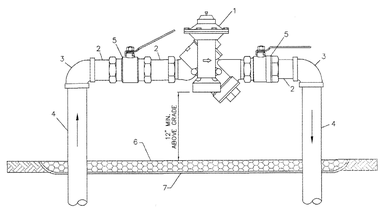

MATERIALS		
ITEM	QUANT.	DESCRIPTION
1	1	3/4", 1", 1-1/2" OR 2" BACKFLOW PREVENTER ASSEMBLY
2	3	3/4", 1", 1-1/2" OR 2" x NOM. NIPPLES – BRASS
3	2	3/4", 1", 1-1/2" OR 2" x 90° ELBOWS – PVC., BRASS, OR COPPER
4	2	3/4", 1", 1-1/2" OR 2" x VARIES RISER – PVC., BRASS, OR COPPER
5	2	3/4", 1", 1-1/2" OR 2" BALL VALVE
6	*	PEA GRAVEL
7	*	PLASTIC LINER

NOTE:
- FIELD ADJUST AND CUT ITEM 4 TO THE PROPER LENGTH.
- NO GALVANIZED FITTINGS OR PIPE ALLOWED.
- A COPY OF THE ASSEMBLY CERTIFICATION SHALL BE SUBMITTED TO THE CITY'S ENGINEERING DEPARTMENT BEFORE FINAL INSPECTION.
- ASSEMBLY SHOULD HAVE ADEQUATE LANDSCAPING AROUND IT TO OBSCURE VIEW.
- ASSEMBLY SHALL BE PAINTED FOREST GREEN

STANDARD CONSTRUCTION DETAIL
REDUCED PRESSURE BACKFLOW PREVENTER (POTABLE WATER & IRRIGATION)
3/4", 1", 1 1/2", OR 2"
NTS
INDEX W-6D
MARCH 2014

City of Ormond Beach
FINAL APPROVAL
Site Plans Review Committee

NO.	DATE	REVISIONS
1	9-15-15	Rev. per COB-SPRC Comments

WATER SYSTEM CONSTRUCTION DETAILS & NOTES WINDOW WORLD

KIRBY ENGINEERING, L.L.C.
JOHN R. KIRBY, P.E.

JOHN R. KIRBY LICENSE No. 41957 STATE OF FLORIDA PROFESSIONAL ENGINEER
9/11/15

JK DESIGNED
JK DRAWN
3-12-15 DATE
C8

ROADWAY COMPACTION AND DENSITY TESTING REQUIREMENTS

ITEM	TEST	FREQUENCY	STANDARD	TEST METHOD
ROADWAY SUBBASE (BOTTOM OF SUBBASE DOWN 1 FOOT)	IN-PLACE DENSITY	ONE (1) TEST/300 LF	95% MODIFIED PROCTOR (ASTM D-1557 OR AASHTO T-180)	ASTM D-2937 D-2922 D-1556
STABILIZED SUBBASE	IN-PLACE DENSITY	ONE (1) TEST/300 LF	95% MODIFIED PROCTOR (ASTM D-1557 OR AASHTO T-180)	ASTM D-2937 D-2922 D-1556
STABILIZED SUBBASE	FLORIDA BEARING VALUE (FBV)	ONE (1) TEST/300 LF	FBV = 75	
STABILIZED SUBBASE	LIMEROCK BEARING RATIO (LBR)	ONE (1) TEST/SOIL TYPE	LBR = 40	
LIMEROCK BASE	IN-PLACE DENSITY	ONE (1) TEST/300 LF	98% MODIFIED PROCTOR (ASTM D-1557 OR AASHTO T-180)	ASTM D-2937 D-2922 D-1556
LIMEROCK BASE	LIMEROCK BEARING RATIO (LBR)	PROVIDE CERTIFICATE FROM PLANT	LBR 100	FM 8-515
CRUSHED CONCRETE BASE	IN-PLACE DENSITY	ONE (1) TEST/300 LF	98% MODIFIED PROCTOR (ASTM D-1557 OR AASHTO T-180)	ASTM D-2937 D-1556
CRUSHED CONCRETE BASE	LIMEROCK BEARING RATIO (LBR)	(1) PER VISIBLE CHANGE IN MATERIAL BLEND	LBR 100	
ASPHALT	EXTRACTION AND GRADATION	(1) PER DAY PER MIX	PER MIX DESIGN	D-2922
ASPHALT	THICKNESS AND DENSITY	(1) PER 300 LF ROADWAY	PER MIX DESIGN AND JOB SPECS	CORING OR NUCLEAR (DENSITY ONLY)
SOIL OPTIMUM MOISTURE/DENSITY	PROCTOR TEST	(1) PER SOIL OR BASE TYPE		ASTM D-1557 (MODIFIED) ASTM D-558 (STANDARD) AASHTO T-180 (MODIFIED) AASHTO T-99 (STANDARD)
CURB SUBBASE	IN-PLACE DENSITY	ONE (1) TEST/300 LF	98% MODIFIED PROCTOR (ASTM D-1557 OR AASHTO T-180)	
CURB SUBBASE (LBR)	LIMEROCK BEARING RATIO (LBR)	(1) TEST/SOIL CHANGE	LBR 40	

STANDARD CONSTRUCTION DETAIL
TECHNICAL SPECIFICATIONS FOR TESTING REQUIREMENTS
INDEX R-6A
MARCH 2014

PIPED UTILITY INSTALLATION REQUIREMENTS

ITEM	TEST	FREQUENCY	STANDARD	TEST METHOD
PIPE TRENCH SUBBASE (IF SPECIFIED)	IN-PLACE DENSITY	ONE (1) TEST/300 LF	98% MODIFIED PROCTOR	ASTM D-2937 D-2922 D-1556
PIPED BACKFILL IN PAVED AREAS	IN-PLACE DENSITY	ONE (1) TEST/300 LF PER ONE (1) FOOT VERTICAL LIFT OF FILL	98% MODIFIED PROCTOR	ASTM D-2937 D-2922 D-1556
PIPED BACKFILL IN GREEN AREAS	IN-PLACE DENSITY	ONE (1) TEST/300 LF PER ONE (1) FOOT VERTICAL LIFT OF FILL	90% MODIFIED PROCTOR	ASTM D-2937 D-2922 D-1556
SOIL OPTIMUM MOISTURE/DENSITY	PROCTOR TEST	ONE (1) PER SOIL OR BASE TYPE		ASTM D-2937 (MODIFIED) ASTM D-558 (STANDARD) AASHTO T-180 (MODIFIED) AASHTO T-99 (STD.)

STANDARD CONSTRUCTION DETAIL
TECHNICAL SPECIFICATIONS FOR TESTING REQUIREMENTS
INDEX R-6B
MARCH 2014

A. SCOPE OF WORK – THE WORK IN THIS SECTION CONSISTS OF FURNISHING AND COMPLETELY INSTALLING SEED AND MULCH OVER THE LIMITS CALLED FOR ON THE CONSTRUCTION DRAWINGS.

B. MATERIALS – GRASS SEED SHALL BE A MIXTURE OF:

PENSACOLA BAHIA (50% SCARIFIED SEED)	80 LBS/ACRE
HULLED BERMUDA	20 LBS/ACRE
BROWN TOP MILLET	30 LBS/ACRE

IN THE FALL AND WINTER MONTHS (OCT. THRU FEB.) AND WITH THE APPROVAL OF THE CITY, ANNUAL RYE GRASS SHALL BE SUBSTITUTED IN EQUAL AMOUNTS FOR THE BROWN TOP MILLET. SEED SHALL BE PREMIXED BY A SEED COMPANY TO THE PROPORTIONS DESCRIBED ABOVE, WITH CERTIFICATION FROM THE SUPPLIER PROVIDED TO THE CITY, PRIOR TO USE. MULCH USED SHALL BE STRAW OR HAY CONSISTING OF OATS, RYE OR WHEAT STRAW OF PANGOLA, PEANUT, COASTAL BERMUDA OR BAHIA GRASS HAY. MULCH SHALL BE FREE FROM UNDESIRABLE WEED AND OTHER UNDESIRABLE GRASS.

C. METHODS – GRASSING SHALL BE DONE IMMEDIATELY UPON COMPLETION OF THE FINE GRADING OPERATION. HOWEVER, NO SEEDING SHALL BE DONE WHEN THE GROUND IS FROZEN OR UNDULY WET. THE RATE OF SPREAD FOR THE SEED MATERIAL SHALL BE ONE HUNDRED AND THIRTY (130) POUNDS PER ACRE. APPROXIMATELY TWO INCHES (2"), LOOSE THICKNESS, OF MULCH MATERIAL SHALL BE APPLIED INFORMALLY OVER THE GRASSED AREAS (APPROXIMATELY 1 1/2 BALES PER 1000 SQUARE FEET). THE MULCH MATERIAL SHALL BE CUT INTO THE SOIL WITH A DISC HARROW OR OTHERWISE ANCHORED DOWN.

D. FERTILIZER –
1. ANALYSIS OF SOILS SHALL BE OBTAINED BY SUBMITTAL OF SAMPLES TO VOLUSIA COUNTY AGRICULTURAL DEPARTMENT (PHONE: 258-7000). ALL APPLICATION RATES WILL BE BASED ON THIS REPORT. SUBMIT A COPY OF THIS REPORT TO THE CITY PRIOR TO COMMENCING ANY SOIL MODIFICATION.

2. THE FERTILIZER SHALL BE A COMMERCIAL GRANULAR TYPE WITH A CHEMICAL DESIGNATION AS RECOMMENDED IN THE SOILS ANALYSIS REPORT.

3. THE NUMERICAL DESIGNATIONS FOR FERTILIZER INDICATE THE MINIMUM PERCENTAGES (RESPECTIVELY) OF (1) TOTAL NITROGEN, (2) AVAILABLE PHOSPHORIC ACID AND (3) WATER SOLUBLE POTASH CONTAINED IN THE FERTILIZER.
a) AT LEAST 50 PERCENT (50%) OF THE PHOSPHORIC ACID SHALL BE FROM A NORMAL SUPER PHOSPHATE OR AN EQUIVALENT SOURCE WHICH WILL PROVIDE A MINIMUM OF TWO UNITS OF SULFUR.
b) THE AMOUNT OF SULFUR SHALL BE INDICATED ON THE QUANTITIVE ANALYSIS CARD ATTACHED TO EACH BAG OR CONTAINER.

4. COMMERCIAL FERTILIZERS SHALL COMPLY WITH THE STATE FERTILIZER LAWS.

5. FERTILIZER MAY, AT THE DISCRETION OF THE ENGINEER/ARCHITECT, UPON THE PRESENTATION BY THE MANUFACTURE OF SATISFACTORY FACTORY EVIDENCE OF ITS FEASIBILITY, BE APPLIED IN LIQUID FORM.

STANDARD CONSTRUCTION DETAIL
SEEDING AND MULCHING
INDEX R-7
MARCH 2014

City of Ormond Beach
FINAL APPROVAL
Site Plan Review Committee

NO.	DATE	REVISIONS

PAVING DETAILS & TESTING NOTES
WINDOW WORLD

KIRBY ENGINEERING, L.L.C.
JOHN R. KIRBY, P.E.

JOHN R. KIRBY LICENSE No. 41957 STATE OF FLORIDA PROFESSIONAL ENGINEER

JK DESIGNED
JK DRAWN
3-12-15 DATE
C9

IN ORDER TO ENSURE THAT NEW DEVELOPMENTS WITHIN THE CITY ARE CONSTRUCTED SUBSTANTIALLY IN ACCORDANCE WITH CITY REGULATIONS AND THE APPROVED DRAWINGS "AS-BUILT" DRAWINGS ARE REQUIRED:

THE FOLLOWING INFORMATION IS REQUIRED ON ALL PAVING AND DRAINAGE "AS-BUILT" DRAWINGS:

1. PAVEMENT AND CURB WIDTHS SHALL BE VERIFIED AND DIMENSIONED FOR EACH STREET AT EACH BLOCK. ALL RADII AT INTERSECTIONS SHALL BE VERIFIED AND DIMENSIONED. THIS INFORMATION TO CLEARLY INDICATE IT AS AS BEING "AS-BUILT" INFORMATION.
2. ROADWAY ELEVATIONS SHALL BE RECORDED AT ALL GRADE CHANGES OR OTHER INTERVALS AS NEEDED ALONG ALL STREETS. STREET CENTERLINE AND CURB INVERT ELEVATIONS SHALL BE RECORDED AS NOTED. THE "AS-BUILT" CENTERLINE PROFILE OF ALL STREETS SHALL ALSO BE SHOWN ON THE PLAN AND PROFILE SO IT MAY BE COMPARED TO THE EXISTING AND DESIGNED PROFILE GRADE LINES. ALL STREET CENTERLINES ON "AS-BUILTS" SHALL BE LABELED WITH STREET NAME AND RIGHT-OF-WAY WIDTH ON EVERY PAGE.
3. STORM DRAINAGE STRUCTURES SHALL BE LOCATED AND/OR DIMENSIONED FROM CENTERLINES OR LOT LINES AS APPROPRIATE.
4. STORM DRAINAGE PIPE INVERT AND STRUCTURE TOP AND BOTTOM ELEVATIONS SHALL BE RECORDED AND CLEARLY DENOTED AS "AS-BUILT" INFORMATION. DESIGN ELEVATIONS SHALL BE CROSSED OUT AND "AS-BUILT" INFORMATION WRITTEN NEXT TO IT.
5. STORM DRAINAGE PIPE MATERIAL, LENGTH, AND SIZE SHALL BE MEASURED AND/OR VERIFIED. THIS INFORMATION TO CLEARLY INDICATE IT AS BEING "AS-BUILT" INFORMATION.
6. ALL APPLICABLE TOPOGRAPHIC INFORMATION, PERTINENT TO THE ON SITE DRAINAGE SYSTEM SUCH AS DITCHES, LAKES, CANALS, ETC. THAT ARE DEEMED APPROPRIATE BY THE CITY SHALL BE NOTED. NORMALLY, RECORDING ELEVATIONS EVERY 100 FEET AT THE TOP OF BANK AND TOE OF SLOPE WILL BE REQUIRED. MEASUREMENTS SHALL BE TAKEN AND RECORDED IN ORDER TO ACCURATELY TIE DOWN THESE FEATURES TO THE ROADWAY CENTERLINES AND TO PLAT LINES WHENEVER POSSIBLE. CONTOUR LINES SHALL BE UTILIZED TO GRAPHICALLY DESCRIBE THESE TOPOGRAPHIC FEATURES.
7. RETENTION AREAS SHALL HAVE THEIR TOP-OF-BANK AND BOTTOM ELEVATIONS RECORDED. ACTUAL MEASUREMENTS SHALL BE TAKEN AND DIMENSIONS RECORDED OF THE SIZE OF ALL RETENTION AREAS. MEASUREMENTS SHALL BE DONE FROM TOP-OF-BANK TO TOP-OF-BANK WITH SIDE SLOPES INDICATED. SEPARATE CALCULATIONS SHALL BE SUBMITTED TO INDICATE REQUIRED AND PROVIDED RETENTION VOLUMES.
8. STORM DRAINAGE SWALE CENTERLINES SHALL BE LOCATED AND ELEVATIONS OF FLOW LINE SHALL BE RECORDED EVERY 100 FEET.
9. ANY SPECIAL FEATURES SUCH AS CONCRETE FLUMES, LAKE BANKS, WALLS, FENCING, ETC., WHICH WERE A PART OF THE APPROVED CONSTRUCTION DRAWINGS SHOULD ALSO BE LOCATED AND DIMENSIONED.
10. ACTUAL MATERIALS USED AND ELEVATIONS AND DIMENSIONS OF OVERFLOW WEIR STRUCTURES AND SKIMMERS SHALL BE NOTED ON THE "AS-BUILT".

THE FOLLOWING INFORMATION IS REQUIRED ON ALL WATER AND SEWER "AS-BUILT" DRAWINGS:

11. SANITARY SEWER MANHOLES SHALL BE VERIFIED AND DIMENSIONED FROM STREET CENTERLINES OR LOT LINES AS APPROPRIATE. ALL RIM AND INVERT ELEVATIONS SHALL BE VERIFIED AND RECORDED. THIS INFORMATION TO CLEARLY INDICATE IT AS BEING "AS-BUILT" INFORMATION.
12. SANITARY SEWER LINE LENGTHS, SIZES, MATERIAL, SLOPE, ETC., SHALL BE VERIFIED AND RECORDED. THIS INFORMATION TO CLEARLY INDICATE IT AS BEING "AS-BUILT" INFORMATION.

STANDARD CONSTRUCTION DETAIL
REQUIREMENTS FOR "AS-BUILT" DRAWINGS
INDEX M-1A
MARCH 2014

13. SEWER LATERALS SHALL BE VERIFIED AND RECORDED AT THEIR CLEAN-OUT LOCATIONS. STATIONING AND OFFSET DISTANCES SHALL BE MEASURED FROM DOWNSTREAM MANHOLES TOWARDS UPSTREAM MANHOLES.
14. LIFT STATIONS AND FORCE MAINS SHALL BE VERIFIED AND DIMENSIONED FROM STREET CENTERLINES OR LOT LINES AS APPROPRIATE. FORCE MAIN DEPTH AND LOCATION INCLUDING VALVES WILL BE PROVIDED AND TIED TO PERMANENT ABOVE GRADE FEATURES EVERY 500 FEET. DIMENSIONAL AND ELEVATION INFORMATION INDICATED ON THE APPROVED PLAN SHALL BE VERIFIED AND RECORDED. THIS INFORMATION TO CLEARLY INDICATE IT AS BEING "AS-BUILT" INFORMATION. BURIED ELECTRICAL SERVICE LINE SHALL BE CLEARLY DIMENSIONED, LOCATED AND LABELED.
15. CURB CUTS OR METAL TABS, USED TO MARK SEWER LATERALS, WATER SERVICES AND WATER VALVES, SHALL BE VERIFIED FOR PRESENCE AND ACCURACY OF LOCATION.
16. WATER MAIN LINES SHALL BE DIMENSIONED OFF THE BACK OF CURB OR EDGE OF PAVEMENT IF NO CURB IS PRESENT. WATER MAIN LINE MATERIAL, SIZE, LENGTH AND DEPTH PLACED SHALL ALSO BE NOTED. THIS INFORMATION TO CLEARLY INDICATE IT AS BEING "AS-BUILT" INFORMATION.
17. WATER VALVES, TEES, ALL SERVICES, BLOW - OFFS AND FIRE HYDRANTS SHALL BE LOCATED BY TYING THEM TO SANITARY SEWER MANHOLES, STATIONING AND OFFSET DISTANCES SHALL BE MEASURED FROM DOWNSTREAM MANHOLES TO UPSTREAM MANHOLES.

THE FOLLOWING INFORMATION IS GENERAL REQUIREMENTS OF ALL "AS-BUILT" DRAWINGS:

18. FOR PERPENDICULAR CROSSINGS OF STORM WATER, SANITARY SEWER, POTABLE WATER, OR RECLAIMED WATER, THE "AS-BUILT" PLANS SHALL CLEARLY INDICATE WHICH UTILITIES ARE LOCATED OVER OR UNDER OTHER UTILITIES, AS NECESSARY.
19. WHEN STORM WATER, POTABLE WATER, RECLAIMED WATER, OR SANITARY SEWER IMPROVEMENTS ARE LOCATED WITHIN AN EASEMENT, THE "AS-BUILT" SHALL ACCURATELY DEPICT THE LOCATION OF THE EASEMENT ITSELF AS WELL AS THE EXACT LOCATION OF THE IMPROVEMENTS WITHIN THE EASEMENT. THIS IS REQUIRED IN ORDER TO VERIFY THAT THE IMPROVEMENTS HAVE BEEN PROPERLY LOCATED AND TO ENSURE THAT FUTURE SUBSURFACE EXCAVATION TO PERFORM REMEDIAL REPAIR CAN BE ACCOMPLISHED WITHOUT DISTURBANCE BEYOND THE EASEMENT. SUCH DOCUMENTATION AND THE ASSOCIATED PROPOSED EASEMENT DOCUMENT WITH LEGAL DESCRIPTION SHALL BE SUBMITTED FOR CITY REVIEW AND APPROVAL PRIOR TO RECORDING OF SAID EASEMENT. UPON CITY APPROVAL THE EASEMENT SHALL BE RECORDED VIA A SEPARATE LEGAL INSTRUMENT AND SHALL NOT BE INCLUDED AS PART OF HOMEOWNER COVENANTS AND RESTRICTIONS.
20. SUBMIT CERTIFIED PAPER PRELIMINARY "AS-BUILT" (24"x36") WITH REQUEST FOR FINAL INSPECTION. SUBMIT 3 SETS SHOWING WATER FACILITIES, 3 SETS WITH SEWER FACILITIES, AND 3 SETS WITH PAVING AND DRAINAGE FACILITIES. FOLLOWING FINAL INSPECTION AND COMMENTS, THE CONTRACTOR SHALL REVISE AS-BUILTS TO ADDRESS CITY COMMENTS AND SUBMIT 3 SETS CERTIFIED FINAL "AS-BUILTS" ALONG WITH 1 SET CERTIFIED MYLARS AND 1 CD-ROM CONTAINING AUTO-CAD FILES AND PDF VERSIONS SHOWING ALL "AS-BUILT" SHEETS. ALL "AS-BUILT" DRAWINGS SHALL BE CERTIFIED BY A REGISTERED LAND SURVEYOR AND ENGINEER OF RECORD.
21. INDICATE VERTICAL DATUM REFERENCE ON ALL SHEETS.
22. CAD FILE OF "AS-BUILTS" SHALL BE IN STATE PLANE COORDINATES; FILE SHOULD INCLUDE REFERENCE TO PROJECTION. (FLORIDA EAST, NAD83)
23. ALL "AS-BUILT" DRAWINGS SHALL BE PREPARED BY A FLORIDA REGISTERED LAND SURVEYOR USING THE FINAL APPROVED SITE DESIGN PREPARED BY THE ENGINEER OF RECORD. LINE WEIGHTS, LINETYPES, AND ANNOTATION SHALL BE MANAGED IN A MANNER THAT CLEARLY DISTINGUISHES DESIGN INFORMATION FROM "AS-BUILT" INFORMATION.
24. ALL "AS-BUILT" SHEETS SHALL INCLUDE A TITLE BLOCK AND CLEARLY STATE PROJECT NAME, PROJECT SURVEYOR, DATE OF FIELD WORK, AS WELL AS PROJECT CERTIFICATION BLOCK FROM THE ENGINEER OF RECORD.

NOTE: REFERENCES TO WATER SHALL MEAN BOTH POTABLE AND RECLAIMED WATER.

STANDARD CONSTRUCTION DETAIL
REQUIREMENTS FOR AS BUILT DRAWINGS
INDEX M-1B
MARCH 2014

GENERAL NOTES:

1. ALL CONSTRUCTION SHALL BE IN ACCORDANCE WITH THE CITY OF ORMOND BEACH'S LAND DEVELOPMENT CODE REQUIREMENTS, AND THE STANDARD CONSTRUCTION DETAILS AND CONSTRUCTION SPECIFICATIONS (SCDCS). AN ENGINEERING PERMIT AND TREE REMOVAL PERMIT IS REQUIRED PRIOR TO STARTING CONSTRUCTION.
2. NO LAND SHALL BE CLEARED, EXCAVATED OR FILLED AND NO STRUCTURE SHALL BE ERECTED, REPAIRED OR DEMOLISHED WITHOUT PROPER PERMIT(S) AS REQUIRED BY THE CITY OF ORMOND BEACH.
3. NOTIFY THE CITY OF ORMOND BEACH'S ENGINEERING DIVISION AT 676-3269 48 HOURS PRIOR TO THE START OF CONSTRUCTION.
4. ANY CONSTRUCTION CHANGES TO APPROVED PLANS SHALL BE SUBMITTED TO THE CITY OF ORMOND BEACH FOR APPROVAL PRIOR TO PERFORMING THE WORK.
5. ROAD CONSTRUCTION AND PIPE INSTALLATION COMPACTION AND DENSITY TESTING SHALL CONFORM TO THE CITY OF ORMOND BEACH'S MINIMUM REQUIREMENTS. CERTIFIED COPIES OF TEST REPORTS SHALL BE SUBMITTED TO THE CITY INSPECTOR AND THE CITY'S ENGINEERING DIVISION.
6. A PRE-PAVING UTILITY INSPECTION MUST BE REQUESTED AND COMPLETED PRIOR TO THE PAVING OF ALL ROADS, STREETS, AND PARKING AREAS.
7. A FINAL INSPECTION, TO BE CONDUCTED BY THE CITY OF ORMOND BEACH, SHALL BE PERFORMED ON ALL CONSTRUCTION. THE DESIGN ENGINEER SHALL NOTIFY THE CITY OF ORMOND BEACH'S ENGINEERING DIVISION 676-3269 WHEN REQUESTING A FINAL INSPECTION.
8. THREE COMPLETE SETS OF AS-BUILT DRAWINGS (5 FOR SUBDIVISIONS) ARE REQUIRED TO BE SUBMITTED TO THE CITY OF ORMOND BEACH PRIOR TO REQUESTING A FINAL INSPECTION.
9. THE CITY HAS A CONTRACTOR FOR ROLL OFF SERVICE. NO OTHER CONTRACTOR SHALL BE PERMITTED TO PROVIDE THIS SERVICE. VERIFY COMPANY UNDER CONTRACT WITH THE CITY.
10. CONSTRUCTION SITES THAT DISTURB ONE ACRE OR MORE WILL BE REQUIRED TO SEEK COVERAGE UNDER THE GENERIC PERMIT FOR STORM WATER DISCHARGE FROM LARGE AND SMALL CONSTRUCTION ACTIVITIES. IN ACCORDANCE WITH THIS REQUIREMENT, A STORM WATER POLLUTION PREVENTION PLAN (SWPP) MUST BE SUBMITTED TO THE CITY'S ENGINEERING DIVISION PRIOR TO CONSTRUCTION TO BE IN COMPLIANCE WITH THE PERMIT.
11. CONTRACTOR WILL FOLLOW REQUIRED WASTE MANAGEMENT PRACTICES
12. SEEDING OR SODDING SHALL BE INITIATED FOR EROSION AND SEDIMENT CONTROL ON DISTURBED AREAS AS SOON AS PRACTICABLE IN PORTIONS OF THE SITE WHERE CONSTRUCTION ACTIVITIES HAVE TEMPORARILY OR PERMANENTLY CEASED.
13. ANY FIELD MODIFICATIONS OR DEVIATIONS TO THIS CONSTRUCTION PLAN REQUIRES WRITTEN APPROVAL BY BOTH THE ENGINEER OF RECORD AND THE CITY OF ORMOND BEACH ENGINEERING DIVISION.

STANDARD CONSTRUCTION DETAIL
GENERAL CONSTRUCTION NOTES
INDEX M-2
MARCH 2014

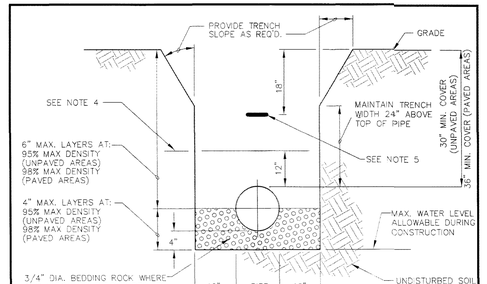

PIPE INSTALLATION DETAIL

NOTES:
1. WHERE SOIL CONDITIONS CAN NOT BE MAINTAINED AS SHOWN ABOVE, PROVIDE APPROVED METHOD OF CONSTRUCTION.
2. SHEETING WILL BE REQUIRED AS DETERMINED IN THE FIELD.
3. COMPACTION PERCENTAGES SHOWN REFER TO A.A.S.H.T.O. T-180. PROVIDE COPIES OF CERTIFIED TEST REPORTS TO CITY INSPECTOR.
4. MECHANICAL COMPACTION NOT ALLOWED BELOW THIS LEVEL.
5. INSTALL METALLIC TAPE OVER FULL LENGTH OF PIPE.

STANDARD CONSTRUCTION DETAIL
PIPE INSTALLATION
NTS
INDEX M-9
MARCH 2014

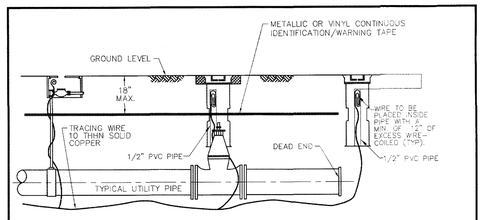

ALL PVC PIPE, OR OTHER CITY APPROVED NONMETALLIC PIPE INSTALLED WITHIN THE CITY'S WATER, SANITARY SEWER, OR RECLAIMED WATER SYSTEMS, SHALL BE INSTALLED WITH 10 THHN SOLID COPPER TRACING WIRE. IF PIPE IS INSTALLED BY DIRECTIONAL BORE, USE (2) 10 THHN SOLID COPPER TRACING WIRE.

THE TRACING WIRE MUST BE INSTALLED DIRECTLY BELOW THE PIPE AND BROUGHT TO THE SURFACE AT 500' MINIMUM INTERVALS. WIRE SHALL EXTEND A MINIMUM OF 12" ABOVE GRADE AT EACH INTERVAL AND BE COILED AND PLACED IN A VALVE BOX, METER BOX, MANHOLE, CLEANOUT OR OTHER APPLICABLE STRUCTURE.

TRACING WIRE BETWEEN INTERVALS SHALL BE INSTALLED SO AS TO PROVIDE CONTINUOUS CURRENT WHEN LINE LOCATION EQUIPMENT IS CONNECTED TO THE TRACING WIRE. WIRE BRANCHING FROM MAIN LINES SHALL BE LINKED BY A CITY APPROVED CONNECTOR SUCH AS KING # 2011 SAFETY SEALED CONNECTORS OR APPROVED EQUAL.

COLOR CODING:

POTABLE WATER SYSTEM:	BLUE
RECLAIMED WATER SYSTEM:	LAVENDER
SANITARY SEWER FORCE MAIN SYSTEM:	GREEN

1. POTABLE WATER AND RECLAIMED WATER SYSTEMS: WIRE SHALL BE INSTALLED BELOW ALL MAINS AND SERVICE LINES AND ATTACHED TO VALVES, HYDRANTS AND FITTINGS. WIRE INSTALLED WITH SERVICE LINES SHALL CONNECT TO THE WIRE INSTALLED BELOW THE MAIN AND EXTEND TO THE CURB STOP.
2. FIRE SPRINKLER LINES: WIRE SHALL CONNECT TO THE WIRE INSTALLED BELOW THE MAIN AND EXTEND TO THE RISER CONNECTION.
3. SANITARY SEWER FORCE MAINS: WIRE SHALL BE INSTALLED BELOW THE FORCE MAIN AND ATTACHED TO ALL VALVES AND FITTINGS AND BROUGHT TO THE SURFACE AND PLACED IN A METAL CITY APPROVED, VALVE BOX.
4. DEAD END MAINS: WIRE SHALL BE PLACED IN A PROPERLY IDENTIFIED METAL VALVE BOX AT THE END OF THE RUN.
5. WIRE SHALL NOT BE FASTENED OR COILED TO VALVE OPERATING NUT.

STANDARD CONSTRUCTION DETAIL
UTILITY PIPE LOCATION MATERIALS
NTS
INDEX M-10
MARCH 2014

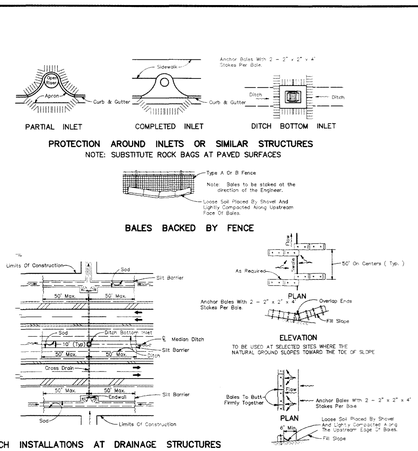

PROTECTION AROUND INLETS OR SIMILAR STRUCTURES
NOTE: SUBSTITUTE ROCK BAGS AT PAVED SURFACES

BALES BACKED BY FENCE

DITCH INSTALLATIONS AT DRAINAGE STRUCTURES

BARRIERS FOR FILL SLOPES

STANDARD CONSTRUCTION DETAIL
EROSION CONTROL - SYNTHETIC BALES
NT
INDEX M-14A
MARCH 2014

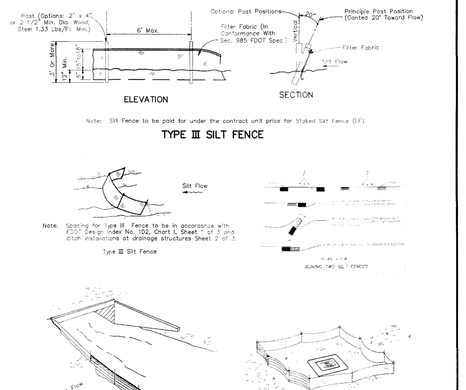

Note: Silt Fence to be paid for under the contract unit price for Staked Silt Fence (LF).

TYPE III SILT FENCE

Note: Spacing for Type III Fence to be in accordance with FDOT Design Index No. 102, Chart I, Sheet 1 of 3 and ditch installations at drainage structures Sheet 2 of 5.

Do not deploy in a manner that silt fences will act as a dam across permanent flowing watercourses. Silt fences are to be used at upland locations and turbidity barriers used at permanent bodies of water.

SILT FENCE APPLICATIONS

STANDARD CONSTRUCTION DETAIL
EROSION CONTROL - SILT FENCE
NTS
INDEX M-15
MACH 2014

City of Ormond Beach
FINAL APPROVAL
Site Plan Review Committee

NO.	DATE	REVISIONS

GENERAL DETAILS & NOTES
WINDOW WORLD

KIRBY ENGINEERING, L.L.C.
JOHN R. KIRBY, P.E.

JK DESIGNED
JK DRAWN
3-12-15 DATE
C10

JOHN R. KIRBY LICENSE No. 41957 STATE OF FLORIDA PROFESSIONAL ENGINEER

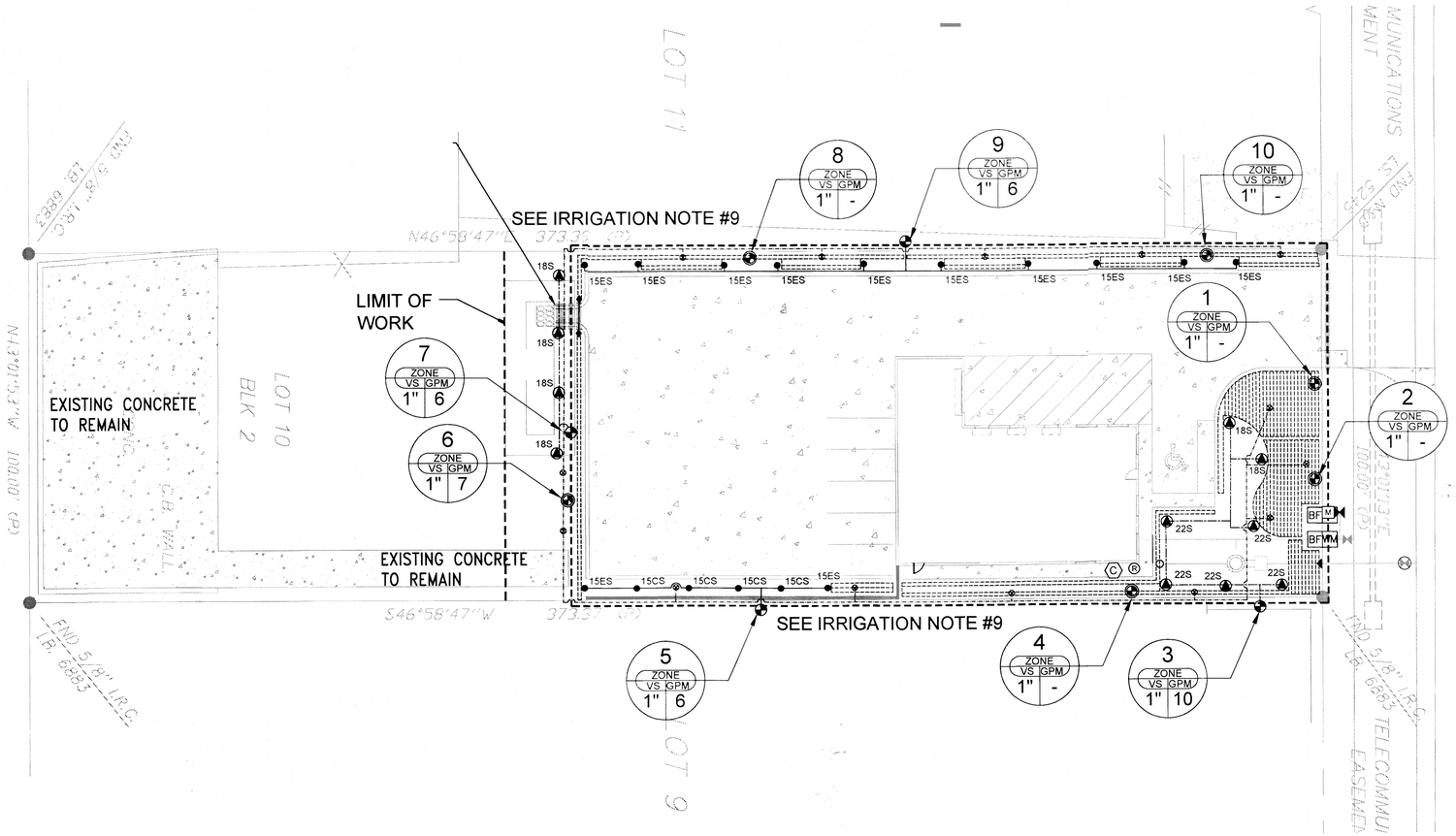

GRAPHIC SCALE
20 0 10 20 40
(IN FEET)
1 inch = 20 ft.

FINAL APPROVAL
Site Plan Review Committee

A-16-15

LANDSCAPE ARCHITECT:
Robert R. Buchanan LA0000932

Landscape Dynamics Construction Co. Inc. hereby asserts its common law copyright and other property rights in these plans, ideas, and designs. These ideas, designs, and plans are not to be reproduced, changed, or copied in any form or manner whatsoever, nor are they to be assigned to any third party, without first obtaining the express written permission from Landscape Dynamics Construction Co. Inc.

Phone 407-579-1911 - Email randy@landscapedynamics.com

Window World
1147 US Highway 1
Ormond Beach, Florida 32174

IRRIGATION SYMBOLS:

- RAINBIRD 1804-SAM-PRS (4" SPRAY)
- RAINBIRD 1806-SAM-PRS (6" SPRAY)
- RAINBIRD 1812-SAM-PRS (12" SPRAY)
- RAINBIRD 1812-SAM-PRS (12" SPRAY ON RISER)
- (2) XERI-BUBBLER ON 1/4" TUBING
- (2) XERI-BUG EMITTER ON 1/4" TUBING
- RAINBIRD 5500 (ROTOR)
- PEB SERIES ELECTRIC REMOTE-CONTROL VALVE
- 1" CONTROL ZONE KIT WITH PRESSURE REGULATING BACKFLUSH FILTER
- RAINBIRD ESP-MC PLASTIC WALL-MOUNT (CONTROLLER)
- RAINBIRD RSD-CEx ROOF CONDUIT (RAIN SENSOR)
- BACKFLOW PREVENTOR
- M 1" WATER METER
- CLASS 200 PVC LATERAL SPRAY LINE
- CLASS 200 PVC LATERAL BUBBLER LINE
- CLASS 200 PVC LATERAL ROTOR LINE
- LANDSCAPE DRIPLINE
- 1½" PVC LATERAL MAINLINE

NOTE: (PIPE TO BE SIZED NOT TO EXCEED A VELOCITY OF 5 FPS / MAX. PSI LOSS IN ZONE LINES NOT TO EXCEED 10% OF OPERATING PSI) MINIMUM PIPE SIZE TO BE ¾"

- PVC SCH 40 SOLVENT WELD SLEEVE PIPE (SL) - SIZE TO BE DOUBLE THAT OF THE LATERAL LINE
- POINT OF CONNECTION - PVC TO DRIP TUBING
- FLUSH VALVE ASSEMBLY
- AIR/VACUUM RELIEF VALVE (NOT SHOWN - INSTALL AS NEEDED)

IRRIGATION NOTES:

1) REFER TO THE LANDSCAPE PLANS WHEN TRENCHING TO AVOID TREES AND SHRUBS. HAND DIG AROUND ANY EXISTING TREES. DO NOT CUT ANY ROOTS OVER 2" IN DIAMETER.

2) ALL MAINLINE PIPING SHALL BE BURIED TO A MINIMUM DEPTH OF 18" OF COVER. ALL LATERAL PIPING SHALL BE BURIED TO A MINIMUM DEPTH OF 12" OF COVER

3) ALL POP-UP ROTORS AND SPRAYS SHALL BE INSTALLED USING A PVC SWING PIPE CONNECTION. DO NOT USE POLYETHLENE PIPE.

4) ADJUST ALL NOZZLES TO REDUCE WATER WASTE ON HARD SURFACES & BLDG. WALLS. THROTTLE ALL VALVES ON SHRUB LINES AS REQUIRED TO PREVENT FOGGING. USE ADJUSTABLE NOZZLES WHERE REQUIRED TO AVOID ANY WATER ON BUILDING WINDOWS.

5) RISERS SHALL BE USED ON THIS SITE.

6) ALL CONTROL WIRE SPLICES SHALL BE MADE IN VALVE BOXES USING KING "ONE STEP" CONNECTORS AND SEALANT WITH WIRE NUTS.

7) THE CONTRACTOR SHALL PREPARE AN AS-BUILT DRAWING SHOWING ALL IRRIGATION INSTALLATION. THE CONTRACTOR SHALL NEATLY MARK IN RED INK ON A WHITE BOND PAPER COPY OF THE IRRIGATION PLAN ANY INSTALLATION THAT DEVIATES FROM THE PLAN. THE AS-BUILT DRAWING SHALL ALSO LOCATE ALL MAINLINE AND VALVES BY SHOWING EXACT MEASUREMENTS FROM HARD SURFACES. MEASUREMENTS SHALL BE MARKED ON THE PLAN EVEN WHEN THE EQUIPMENT IS INSTALLED IN THE EXACT LOCATION AS THE PLAN.

8) ALL VALVES, GATE VALVES AND QUICK COUPLERS SHALL BE INSTALLED IN VALVE BOXES. THE VALVE BOXES SHALL BE PURPLE WHEN USING REUSE WATER.

9) ANY PIPING SHOWN OUTSIDE THE PROPERTY LINE OR RUNNING OUTSIDE A LANDSCAPE AREA IS SHOWN THERE FOR CLARITY ONLY. ALL LINES SHALL BE INSTALLED ON THE PROPERTY AND INSIDE THE LANDSCAPE AREAS OR INSIDE A SCH. 40 SLEEVE.

10) THE EXACT HEIGHT OF ANY 12" POP-UP THAT IS SHOWN IN A SHRUB BED SHALL BE DETERMINED BY THE OWNER'S REPRESENTITIVE IN THE FIELD.

11) THE CONTRACTOR SHALL EXERCISE CARE SO AS NOT TO DAMAGE ANY EXISTING UTILITIES. THE CONTRACTOR SHALL BE RESPONSIBLE FOR THE IMMEDIATE REPAIRS AND COST OF ANY DAMAGE CAUSED BY THEIR WORK.

12) ALL WORK SHALL BE GUARANTEED FOR ONE YEAR FROM THE DATE OF FINAL ACCEPTANCE AGAINST ALL DEFECTS IN EQUIPMENT AND WORKMANSHIP. (OR AS OUTLINED IN THE WRITTEN SPECIFICATIONS)

13) ELECTRICAL SERVICE TO LOCATION OF THE CONTROLLER, WELL OR PUMP SHALL BE PROVIDED TO A JUNCTION BOX OR DISCONNECT AT THE EQUIPMENT LOCATION BY THE ELECTRICAL CONTRACTOR OR BY OWNER WHEN IT IS NOT PART OF THE BID PACKAGE.

14) IT SHALL BE THE RESPONSIBILITY OF THE CONTRACTOR TO SCALE THE PLAN AND CHECK NOZZLE TYPES TO DETERMINE THE CORRECT SPACING OF THE HEADS. THE CONTRACTOR SHALL NOT SPACE THE HEADS FURTHER APART OR USE LESS HEADS THAN SHOWN ON THE PLAN. ANY CHANGES TO THE HEAD SPACING OR LAYOUT, WITHOUT THE CONSENT OF THE LANDSCAPE ARCHITECT OR OWNER, SHALL HOLD THE IRRIGATION CONTRACTOR RESPONSIBLE FOR WARRANTY OF THE PLANTS AND OR SOD IN THESE AREAS.

15) IRRIGATION SYSTEM DESIGN REQUIREMENTS: 60 GPM @ A MINIMUM OF 60 PSI AT EACH POINT OF CONNECTION. THE IRRIGATION CONTRACTOR SHALL VERIFY THE AVAILABLE GPM AND PSI PRIOR TO INSTALLATION OF THE SYTEM.

16) 48 HOURS BEFORE DIGGING, CALL 1-800-432-4770 (SUNSHINE STATE ONE CALL CENTER)

VALVE DESIGNATION GUIDE

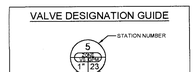

SPRAY PATTERN LEGEND

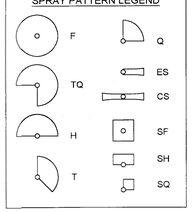

Zones	
Zone #	Specifications
1	LD-P-06-12-600
2	LD-P-06-12-532
3	rotor
4	LD-P-06-12-667
5	spray
6	bubbler
7	rotor
8	LD-P-06-12-318
9	spray
10	LD-P-06-12-396

NOTE: Failure to notify Landscape Architect of plan, detail, or specification discrepancies prior to construction, makes contractor responsible for all costs incurred for construction charges, not the owner or his representative (Landscape Dynamics Construction Co. Inc.) The Owner must maintain the height of all plants within the "Line-Of-Site" triangle area to a height of no greater than 24" above grade for shrubs and groundcover, and tree branching no lower than 72" above finish grade, to ensure clear site line views toward traffic at road and driveway intersections. Landscape Dynamics Construction Co. Inc., is not responsible for continued maintenance of such plant material. The owner, leasing company and/or the landscape maintenance company accepts full responsibility for these maintenance requirements.LANDSCAPE CONTRACTOR TO HAND WATER ALL PLANT / TREE MATERIAL FOR AT LEAST 30 DAYS AFTER INSTALLATION.

48 HOURS BEFORE YOU DIG
CALL SUNSHINE
1-800-432-4770 or 811
IT'S THE LAW IN FLORIDA
FLORIDA LAW REQUIRES EXCAVATORS TO NOTIFY OWNERS OF UNDERGROUND FACILITIES NO LESS THAN TWO (2) DAYS PRIOR TO EXCAVATION

811

LANDSCAPE Dynamics CONSTRUCTION CO., INC.
LANDSCAPE ARCHITECTS AND PLANNERS

P.O. BOX 2852 - Winter Park, Florida 32790-2852

Irrigation Plan
Window World
Ormond Beach, Florida

REVISIONS
1 2 3 4 5 6 7 8 9

DATE: 03-17-15
JOB NUMBER: 15-006
DRAWN BY: BRB
FILE: Irrigation
SCALE: 1: 20

IR-1

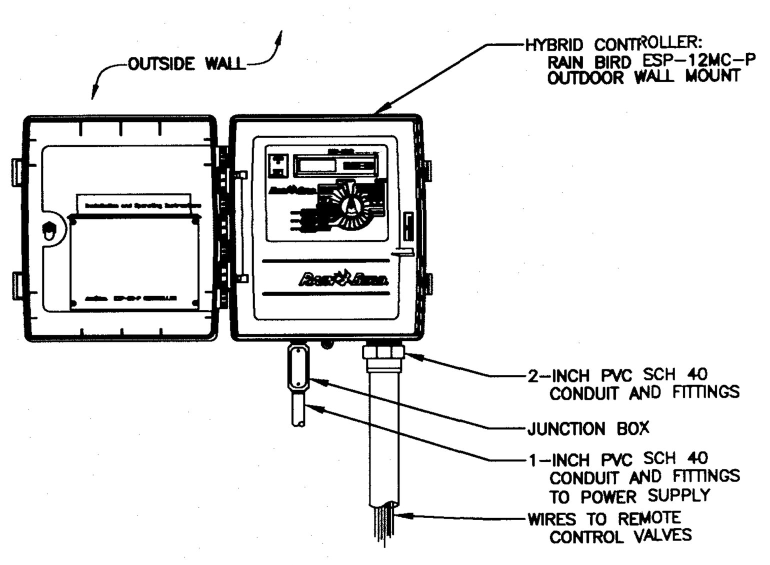

A FOUR PROGRAM HYBRID CONTROLLER
ESP-MC PLASTIC WALL-MOUNT N.T.S.

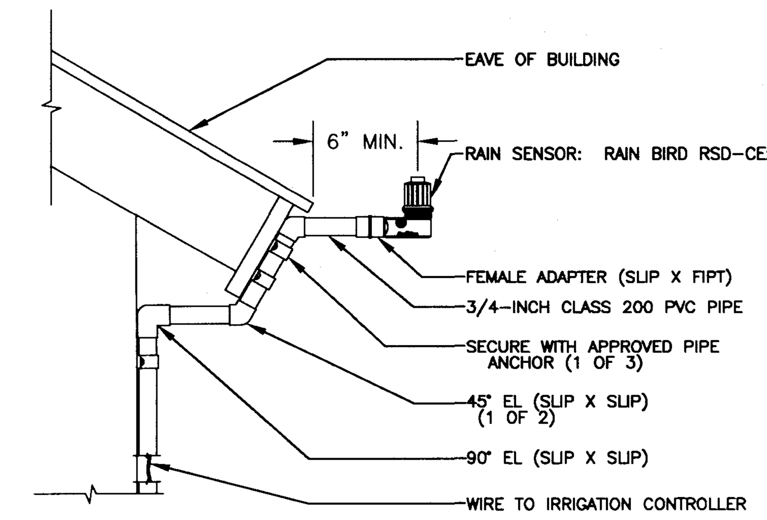

B RAIN SENSOR
RSD-CEx ROOF CONDUIT N.T.S.

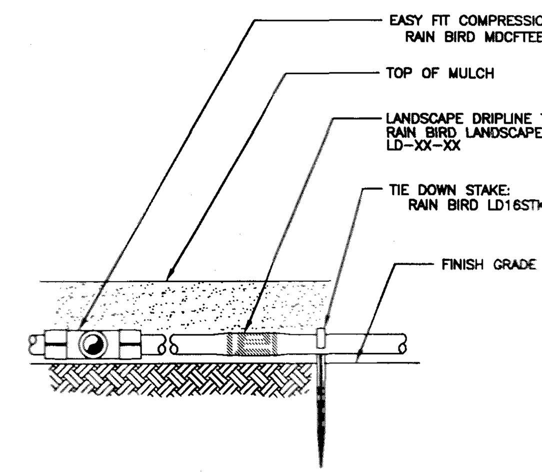

C LANDSCAPE DRIPLINE ON GRADE
POTABLE SYSTEM N.T.S.

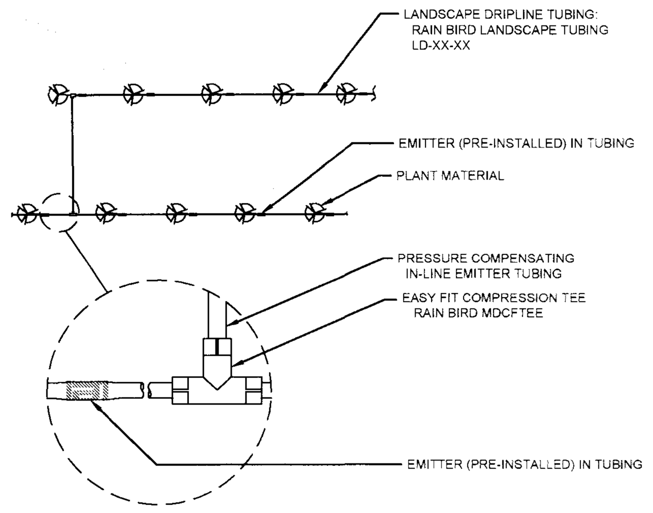

D LANDSCAPE DRIPLINE CONNECTIONS
POTABLE SYSTEM N.T.S.

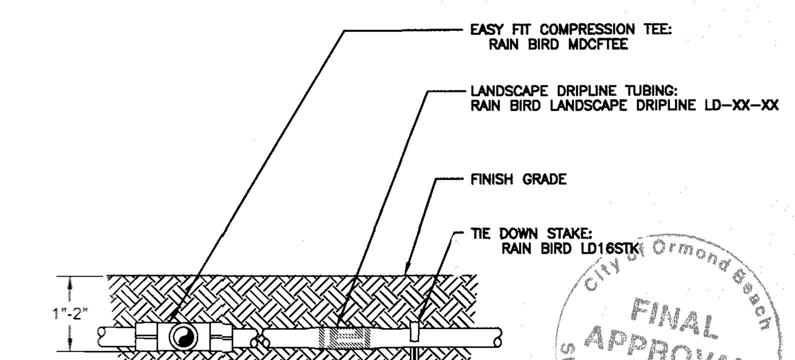

City of Ormond Beach FINAL APPROVAL Site Plan Review Committee

NOTE(S):
IF PUTTING LANDSCAPE DRIPLINE UNDER SOIL, DO NOT BURY MORE THAN 2" BELOW GRADE AND INCLUDE AIR RELIEF VALVE (SEE DRAWING- "AIR RELIEF VALVE KIT-AR VALVE KIT").

E LANDSCAPE DRIPLINE 2" BELOW GRADE
WITH EASY FIT TEE - POTABLE SYSTEM N.T.S.

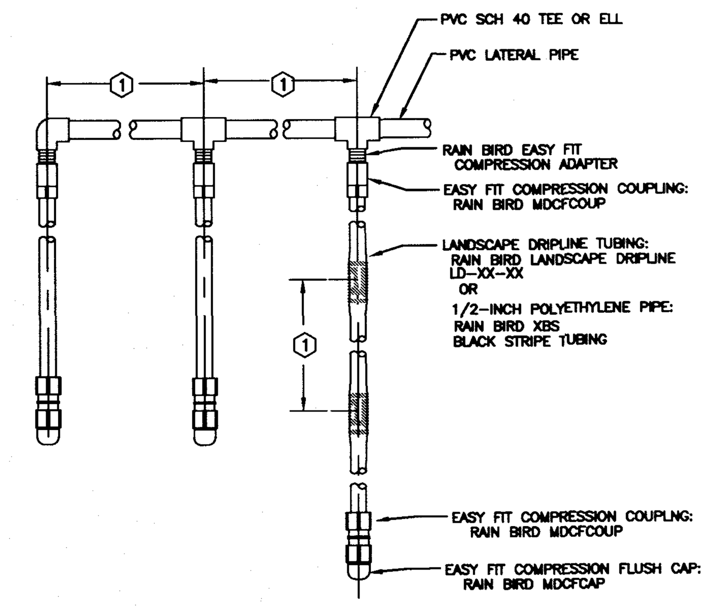

NOTES:
1. LATERAL AND EMITTER SPACING DEPENDS ON SOIL TYPE.

F LANDSCAPE DRIPLINE LATERALS
POTABLE SYSTEM N.T.S.

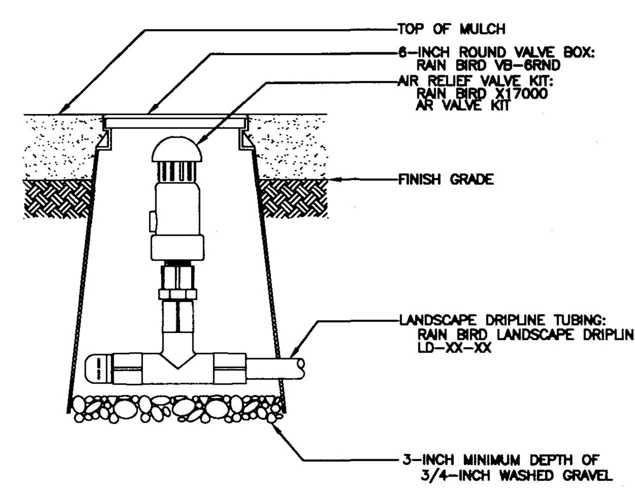

G AIR RELIEF VALVE IN KIT
N.T.S.

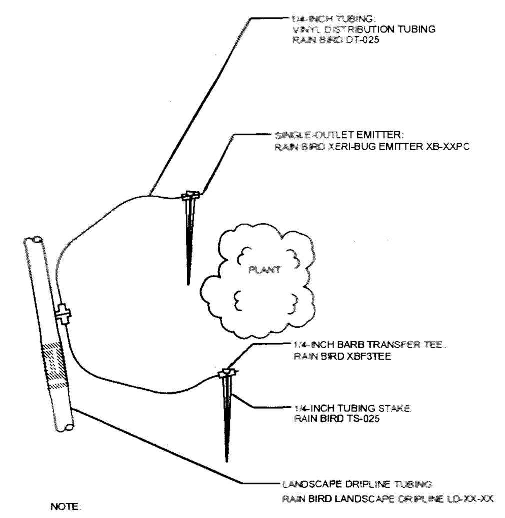

NOTE
USE XERIMAN TOOL XM-TOOL TO INSERT CONNECTOR DIRECTLY INTO LANDSCAPE DRIPLINE.

H LANDSCAPE DRIPLINE
WITH SUPPLEMENTAL EMITTERS N.T.S.

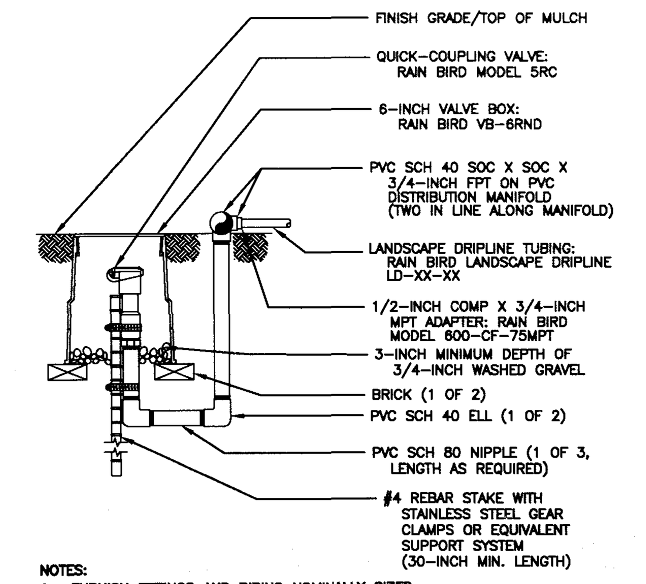

NOTES:
1. FURNISH FITTINGS AND PIPING NOMINALLY SIZED IDENTICAL TO NOMINAL QUICK COUPLING VALVE INLET SIZE.
2. IF POLYETHYLENE IS USED FOR DISTRIBUTION MANIFOLD, SUBSTITUTE INSERT X INSERT X 3/4-INCH FPT INSERT TEE FOR SCH 40 TEE.

I LANDSCAPE DRIPLINE FLUSH POINT
POTABLE SYSTEM N.T.S.

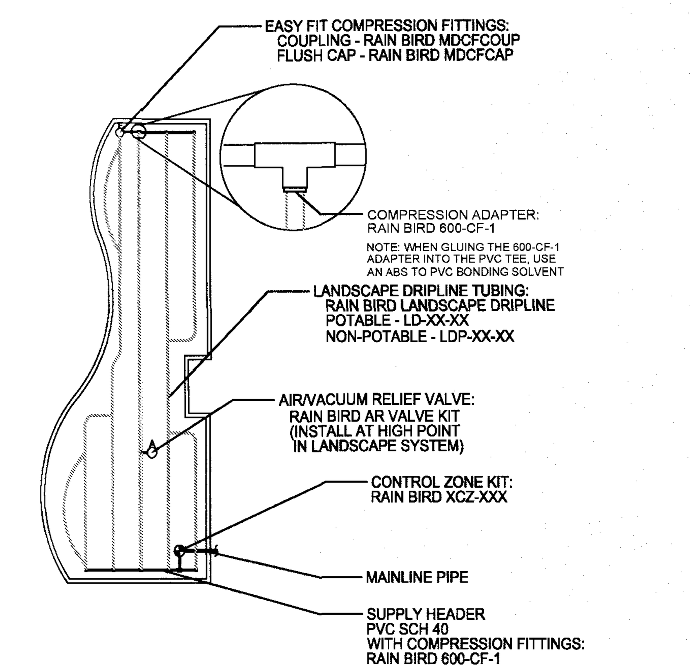

J LANDSCAPE PLANTER - ODD SHAPED
N.T.S.

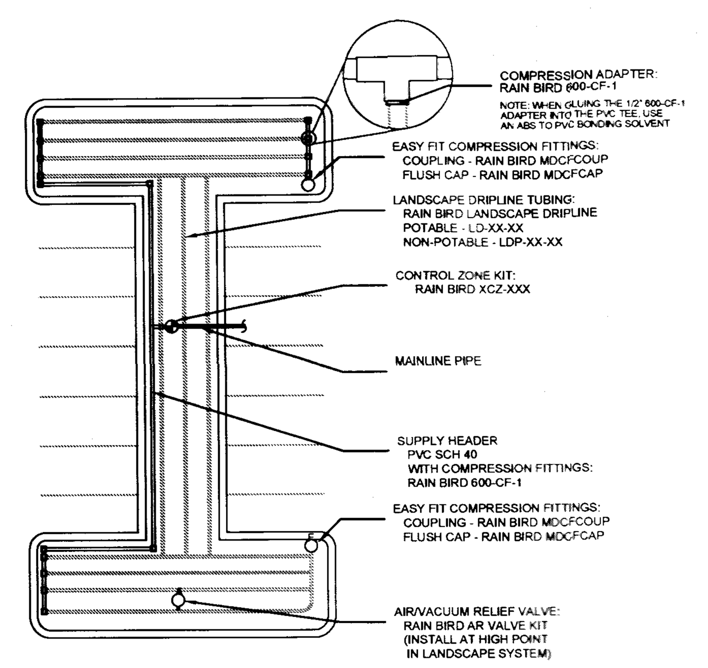

K PARKING LOT - DOGBONE SHAPED
N.T.S.

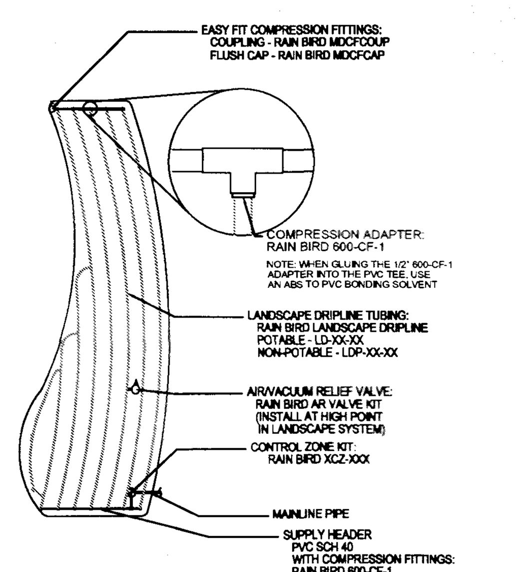

L LANDSCAPE PLANTER - CURVED POLYGON SHAPED
N.T.S.

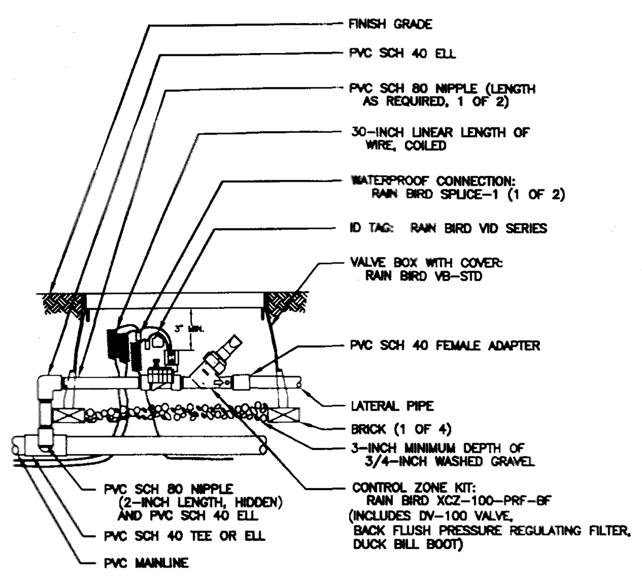

M 1" CONTROL ZONE KIT WITH PRESSURE REGULATING BACKFLUSH FILTER
XCZ-100-PRF-BF N.T.S.

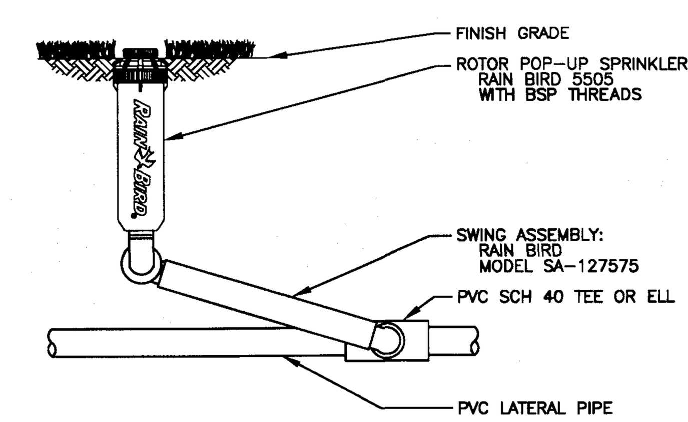

N ROTOR POP-UP SPRINKLER
5505 N.T.S.

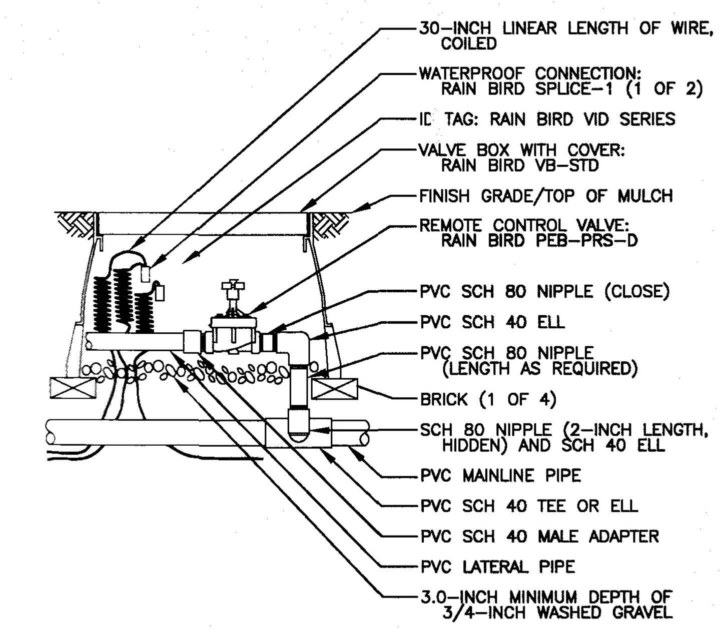

O ELECTRIC REMOTE - CONTROL VALVE
PEB OR PESB-R SERIES N.T.S.

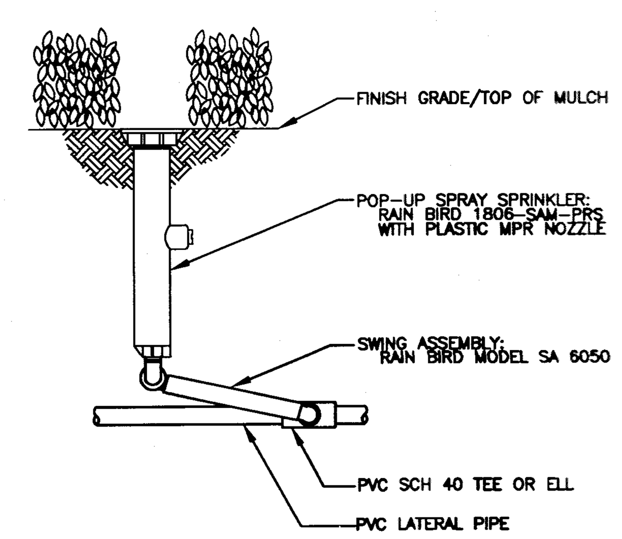

P POP-UP SPRAY SPRINKLER
1806 WITH SWING PIPE N.T.S.

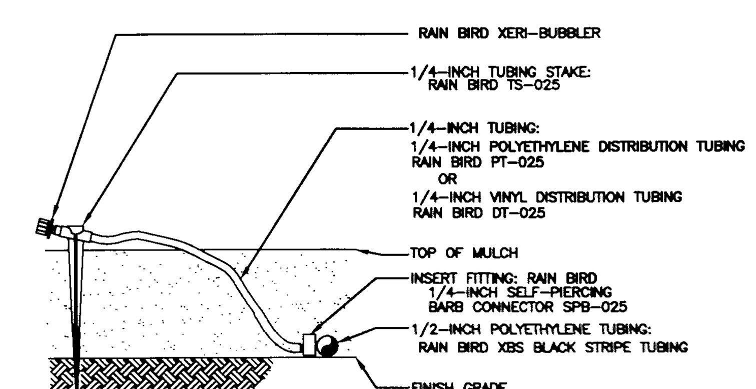

NOTE:
USE XERIMAN TOOL XM-TOOL TO INSERT CONNECTOR DIRECTLY INTO 1/2-INCH POLYETHYLENE TUBING.

Q XERI-BUBBLER ON ¼" TUBING
N.T.S.

NOTE: Failure to notify Landscape Architect of plan, detail, or specification discrepancies prior to construction, makes contractor responsible for all costs incurred for construction charges, not the owner or his representative (Landscape Dynamics Construction Co. Inc.) The Owner must maintain the height of all plants within the "Line-Of-Site" triangle area to a height of no greater than 24" above grade for shrubs and groundcover, and tree branching no lower than 72" above finish grade, to ensure clear site line views toward traffic at road and driveway intersections. Landscape Dynamics Construction Co. Inc., is not responsible for continued maintenance of such plant material. The owner, leasing company and/or the landscape maintenance company accepts full responsibility for these maintenance requirements.LANDSCAPE CONTRACTOR TO HAND WATER ALL PLANT / TREE MATERIAL FOR AT LEAST 30 DAYS AFTER INSTALLATION.

48 HOURS BEFORE YOU DIG
CALL SUNSHINE
1-800-432-4770 or 811
IT'S THE LAW IN FLORIDA
FLORIDA LAW REQUIRES EXCAVATORS TO NOTIFY OWNERS OF UNDERGROUND FACILITIES NO LESS THAN TWO (2) DAYS PRIOR TO EXCAVATION

LANDSCAPE ARCHITECT:
Robert R. Buchanan LA0000932

Landscape Dynamics Construction Co. INC. hereby reserves its common law copyright and other property rights in these plans, ideas, and designs. These ideas, designs, and plans are not to be reproduced, changed, or copied in any form or manner whatsoever, nor are they to be assigned to any third party, without first obtaining the express written permission from Landscape Dynamics Construction Co. INC.

Window World
1147 US Highway 1
Ormond Beach, Florida 32174

Phone: 407-579-1611 - Email: randy@landscapedynamics.com

LANDSCAPE Dynamics CONSTRUCTION CO., INC.
LANDSCAPE ARCHITECTS AND PLANNERS

P.O. BOX 2852 - Winter Park, Florida 32790-2852

Irrigation Details
Window World
Ormond Beach, Florida

REVISIONS
1 2 3 4 5 6 7 8 9

DATE: 03-17-15
JOB NUMBER: 15-006
DRAWN BY: BRB
FILE: Irrigation
SCALE: N.T.S.

IR-2

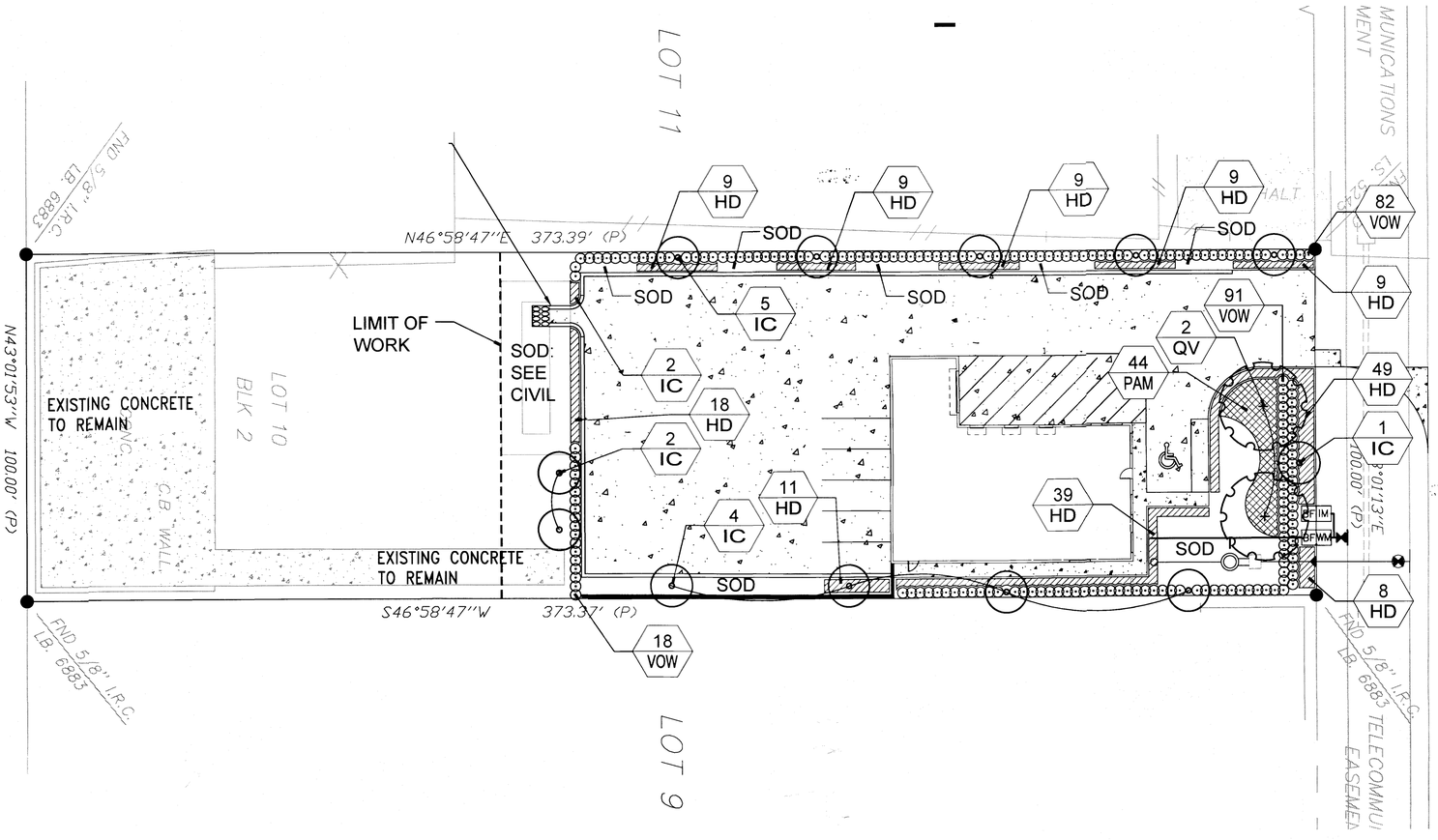

GRAPHIC SCALE
20 0 10 20 40
(IN FEET)
1 inch = 20 ft.

City of Ormond Beach
FINAL APPROVAL
Site Plan Review Committee

LANDSCAPE TABULATION

GENERAL REQUIREMENTS

Ormond Beach Land Development Code Applies
Sec. 3-05. - Landscape and irrigation plan requirements.

Landscape Adjacent to Arterial Roadway:
(Greenbelt: 1 Tree per 200 sf., 60% plantings)

Northeast ₹ 100'
Trees Required: 11 Trees, 60% plantings
Trees Provided: 12 Trees, 60% plantings
(3 @ 4.5" cal. = 12 Trees)

Southeast ₹ 215'
Trees Required: 11 Trees, 60% plantings
Trees Provided: 12 Trees, 60% plantings
(3 @ 4.5" cal. = 12 Trees)

Landscape Adjacent to Other Properties:
(Type "1": 2 trees per 100 l.f., 20 shrubs, 20 groundcovers)

Southwest ₹ 100'
Trees Required: 2 Trees, 20 shrubs, 20 groundcovers
Trees Provided: 2 Trees, 20 shrubs, 20 groundcovers

Northwest ₹ 215'
Trees Required: 4 Trees, 43 shrubs, 43 groundcovers
Trees Provided: 4 Trees, 80 shrubs, 45 groundcovers

Plant List

Count	SYM	BOTANICAL	COMMON	SPECIFICATIONS
TREES				
12	IC	Ilex cassine	Dahoon Holly	10-12' ht. x 5-6' spr., 4.5" cal.
2	QV	Quercus virginiana	Live Oak	10-12' ht. x 5-6' spr., 4.5" cal.
SHRUBS & GROUNDCOVER				
191	VOW	Viburnum obovatum	Walter's Viburnum	30" ht., full, 30" o.c.
170	HD	Helianthus debilis	Beach Sunflower	1 gal., 30" o.c.
44	PAM	Plumbago auriculata 'Monott'	Plumbago	3 gal., 36" o.c.
SOD & MULCH				
	MULCH		Mini Pine Bark	3" Depth
	SOD		Zoysia Sod	solid sod, weed free, count by contractor

NOTE: Failure to notify Landscape Architect of plan, detail, or specification discrepancies prior to construction, makes contractor responsible for all costs incurred for construction charges, not the owner or his representative (Landscape Dynamics Construction Co. Inc.) The Owner must maintain the height of all plants within the "Line-Of-Sight" triangle area to a height of no greater than 24" above grade for shrubs and groundcover, and tree branching no lower than 72" above finish grade, to ensure clear site line views toward traffic at road and driveway intersections. Landscape Dynamics Construction Co. Inc., is not responsible for continued maintenance of such plant material. The owner, leasing company and/or the landscape maintenance company accepts full responsibility for these maintenance requirements.LANDSCAPE CONTRACTOR TO HAND WATER ALL PLANT / TREE MATERIAL FOR AT LEAST 30 DAYS AFTER INSTALLATION.

48 HOURS BEFORE YOU DIG
CALL SUNSHINE
1-800-432-4770 or 811
IT'S THE LAW IN FLORIDA
FLORIDA LAW REQUIRES EXCAVATORS TO NOTIFY OWNERS OF UNDERGROUND FACILITIES NO LESS THAN TWO (2) DAYS PRIOR TO EXCAVATION

811

LANDSCAPE ARCHITECT:
Robert R. Buchanan LA0000932

Landscape Dynamics Construction Co. Inc. hereby reserves the common law copyright and other property rights in these plans, ideas, and designs. These ideas, designs, and plans are not to be reproduced, changed, or copied in any form or manner whatsoever, nor are they to be assigned to any third party, without first obtaining the express written permission from Landscape Dynamics Construction Co. Inc.

Phone 407-579-891 - Email randy@landscapedynamics.com
P.O. BOX 2852 - Winter Park, Florida 32790-2852

Window World
1147 US Highway 1
Ormond Beach, Florida 32174

LANDSCAPE DYNAMICS CONSTRUCTION CO., INC.
LANDSCAPE ARCHITECTS AND PLANNERS

REVISIONS
1 2 3 4 5 6 7 8 9

Landscape Plan
Window World
Ormond Beach, Florida

DATE: 03-17-15
JOB NUMBER: 15-006
DRAWN BY: BRB
FILE: Landscape
SCALE: 1" = 20'

L-1

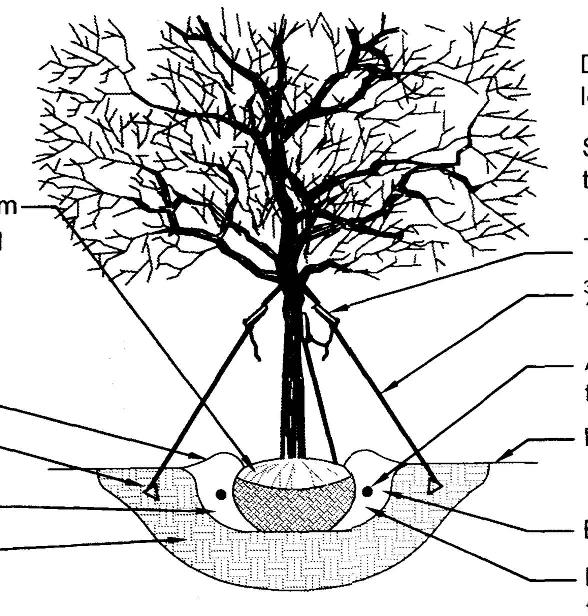

PRO20:
For up to 2" Caliper Trees
(3) ARBORGUY™ Guylines 3/4" x 12' = 600 lb test Black or Green, UV resistant, polypropylene strapping
(3) "Tool-Free" Tension Bars™
(3) Arrowhead *Anchors (4" x 3-3/4")

PRO40:
For up to 4" Caliper Trees
(3) ARBORGUY™ Guylines 1"x12'= 600 lb test, Black or Green, UV resistant polypropylene strapping
(3) "Tool-Free" Tension Bars™
(3) Arrowhead Anchors (4-3/4"x3-3/4")

(A) ARBORGUY® PRO20/PRO40 STAKING AND PLANTING DETAIL
N.T.S.

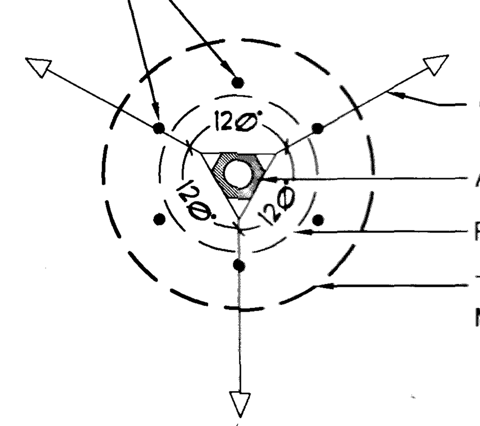

(B) TREE STAKING DETAIL
N.T.S.

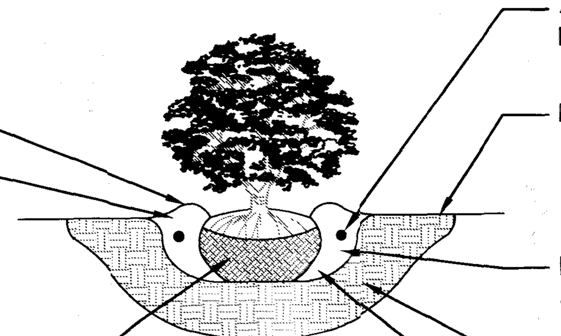

(C) TYPICAL SHRUB/GROUNDCOVER PLANTING DETAIL
N.T.S.

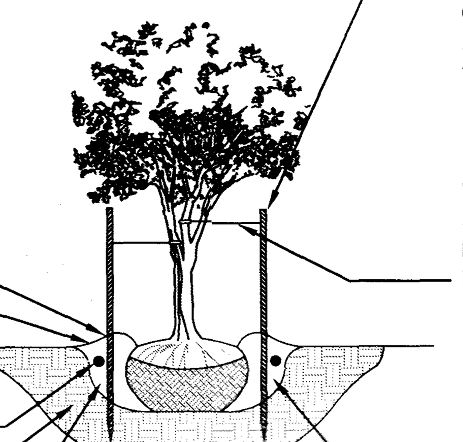

(D) MULTI-TRUNK SPACING DETAIL
N.T.S.

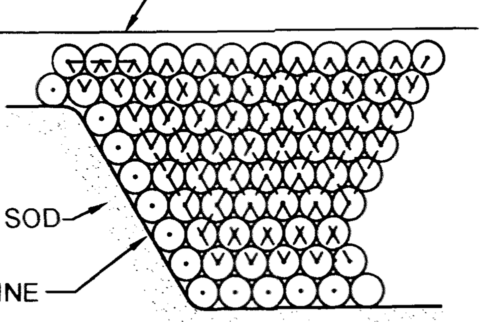

NOTE: FORM EDGE OF BED, THEN FILL IN BED AT TRIANGULAR SPACING AS SPECIFIED ON PLANT LIST.

(E) TYPICAL SPACING DETAIL
N.T.S.

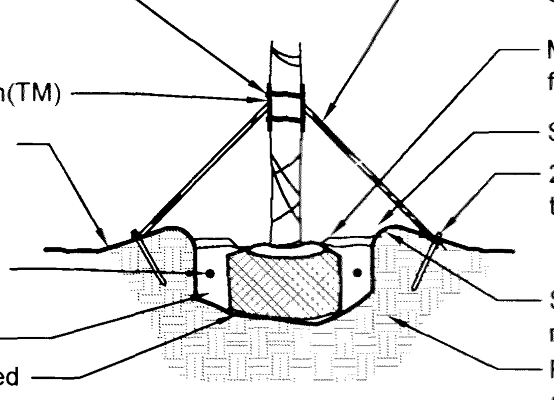

PBKM(Metal Bands)
(3) 1 1/2"x3 1/2"x12" (2x4 wood) battens with 5 layers of burlap backing and (4) staple guides for banding, pre-notched (to accept 2"x4"x8' support braces)
(2) 44" plated carbon steel bands with tensioning and locking screw / clamp

PBKC (Polypropelene Bands)
(3) 1 1/2"x3 1/2"x12" (2x4 wood) battens with 5 layers of burlap backing and (4) staple guides for banding, pre-notched (to accept 2"x4"x8' support braces)
(2) 8'x1", 600 lb test webbing bands with metal spring locking clamps

(F) ARBORGUY® PALM BATTEN DETAIL
N.T.S.

GENERAL LANDSCAPE NOTES:

-Landscape contractor (LC) shall be responsible for all materials and work called for on the landscape plans and in the landscape notes and legend. Plant specifications are minimum acceptable sizes. Plans shall rule if there are any quantity discrepancies between the legend and plans. Final quantity takeoffs are the responsibility of the LC. Notify the Landscape Architect of any discrepancies.
-LC shall comply with all local codes and ordinances and obtain all permits and bonds necessary to construct the project.
-LC shall coordinate their work with other contractors to assure efficient and timely completion of the work.
-LC shall be responsible for supplying all materials, labor, and equipment for the performance of their portion of the work.
-LC to verify all existing grades, dimensions, adequate drainage, suitable planting soil and field conditions and notify owner of discrepancies before proceeding with work. Per FL Statutes, LC to call Sunshine State One (811) 72 hours prior to digging to have all utilities located.
-LC to protect existing utilities, structures, surfaces, and vegetation noted to be saved and be responsible for repair/replacement.
-Protect trees to be saved per detail. Vehicle parking, material storage, or soil removal/addition is not permitted within driplines.
-Round-Up shall be applied twice at ten day intervals onto all existing vegetation, sod, and groundcover areas that are to be replanted. Extreme care shall be taken to prevent overspray and/or drift onto existing plant material to be saved. Mfr's recommendations shall be followed. Remaining weeds and their roots shall be removed by hand prior to installation of plants. Resprouting weeds and plants are the responsibility of the LC through the one year warranty period.
-All plant materials shall be graded Florida No. 1 or better as outlined under current Grades and Standards for Nursery Plants, Division of Plant Industry, State of Florida, unless otherwise noted. All plants not listed shall conform to a Florida No. 1 or better as to: (1) health and vitality, (2) condition of foliage, (3) root system, (4) freedom from pest or mechanical damage, (5) heavily branched and densely foliated according to the accepted normal shape of the species. **LC to obtain written certification from nurseries that plant materials are Florida No. 1 or better.** Trees up to 4" caliper measured at 6" above soil line and over 4" caliper at 12" above soil line unless otherwise noted. All specifications to be met or exceeded unless otherwise noted. All rootballs and containers to be free of weeds and their roots.
-Planting soil of Fla. peat mixed 1/2 with clean topsoil for the backfilling of plant pits and beds shall be required only if existing soil is unsuitable for planting and/or contains lime rock or construction debris (to be removed).
-Trees and palms shall be installed so their top main root at the trunk is visible and 2" above finished grade. If root is buried, remove soil from the top of the rootball prior to installation. Do not apply the 1 ½" of mulch to the top of the rootball until after inspection of each tree or palm.
-Landscape Architect is not responsible for adverse soil or drainage conditions, determining sub-surface soil conditions, underground objects/utilities or the accuracy of property lines or information portrayed on surveys or on documents or plans provided by others. Owner or their agent is solely responsible for future maintenance of all plantings to maintain safe visibility within all visibility sight triangles and vehicular use and pedestrian areas within and immediately adjacent to the site.
-Finished grade prior to mulching or sodding to be 3" below top of adjacent surfaces such as walks, curbs and driveways extending perpendicularly from the surface edge for a minimum distance of 18". See detail.
-All palms, trees, shrubs, and groundcovers shall be fertilized with Agriform 20-10-5 or SierraTabs 16-8-12 planting tablets. One tablet/ 1 gal, 2 tablets/ 3 gal, 3 tablets/ 5 or 7 gal, 4 tablets/ 10 gal and one tablet/ each 1/2" of tree trunk diameter. Application shall be as per the details and mfr's recommendation.
-All planting beds (except for annuals) and trees to receive med. pine bark mulch. **Due to environmental concerns, cypress mulch shall NOT be used.** All tree rootballs (which require 4 foot wide mulch rings in turf areas) shall be mulched to a maximum 1 ½" depth (to aid water penetration) following inspection. All other planting beds to receive a 3" depth. Mulch shall not touch trunks or stems or be applied within the crowns of groundcovers or over their branches or foliage. **Mulch is to be applied by hand and shall not be "blown in".**
-LC to maintain all plant material in a plumb, upright and stable condition. All trees/palms to be guyed/staked as per details.
-LC to remove all bags (unless biodegradable), tags, ties, wires, ropes, stakes and nursery attachments from all plant material.
-LC shall be responsible to keep plant material in a healthy, watered, insect/pest free condition until owner's final acceptance.
-LC to provide a one-year warranty for trees/palms, shrubs, groundcovers, and vines and thirty days for sod. Warranty period shall start with final acceptance by owner. All plant material shall be alive and in satisfactory growth at the end of the warranty period. Replacement plant material shall be warranted for ninety days (sod for thirty days) from replacement date. Warranty shall apply only to material that dies due to poor quality, improper handling, or installation practices. Generally, material transplanted on-site shall not be warranted. Adverse weather conditions shall not apply. Proper watering and maintenance are the owner's responsibility during the warranty period.
-Provide 100% coverage of all landscape areas using automatic underground irrigation system with rain sensor.

NOTES (ORANGE COUNTY):

1) TO SCHEDULE A LANDSCAPE INSPECTION FOR ALL COMPLETED PERMITS, CALL ALL ASSOCIATED PERMIT NUMBERS INTO THE AUTOMATED INSPECTION SYSTEM AT (407) 836-282 5 AND REQUEST A CODE "270" ZONING/LANDSCAPE INSPECTION. INSPECTIONS ARE CONDUCTED ON TUESDAYS AND FRIDAYS ONLY AND SHALL BE CALLED IN BY MIDNIGHT PRIOR TO DAY OF INSPECTION. *** ANY TREES DESIGNATED TO BE PRESERVED ON THIS PLAN BUT THAT ARE SUBSEQUENTLY REMOVED SHALL BE CONSIDERED A VIOLATION PER S EC. 15-281(E) AND AS SUCH, SHALL BE REPLACED IN INCHES ON SITE AT A 2:1 RATIO (NON-SPECIMEN TREES) A ND AT A 4:1 RATIO (SPECIMEN TREES). AS AN ALTERNATIVE, THE VIOLATION MAY BE SATISFIED BY PAYMENT IN TO THE COUNTY TREE FUND AT A RATE OF $206 PER INCH AND $412 PER INCH RESPECTIVELY OR BY SOME COMBINATION OF PLANTING AND PAYMENT. MITIGATION SHALL BE SATISFIED PRIOR TO RELEASE OF ZONING HOLD(S). *** NEWLY PLANTED TREES SHALL BE INSPECTED FOR REMOVAL OF ALL NON-BIODEGRADABLE BURLAP AND STRAPPING FROM THE TOP OF THE ROOT BALL. METAL STRAPPING HOOKS SHALL BE REMOVED OR BENT DOWN ALONG SIDE OF THE ROOT BALL AND COVERED WITH SOIL SO AS TO NOT PROTRUDE ABOVE GRADE. MULCH SHALL BE APPLIED 12"-18" AWAY FROM THE TREE TRUNK IN ORDER TO REDUCE INTERCEPTION OF WATER TO THE TREE ROOTS. GO TO HTTP://HORT.I FAS.UFL.EDU/WOODY/OVER-MULCHING.SHTML FOR MORE INFORMATION.

2) MULCH, PER SEC. 24-6(B)(4) SHALL BE ORGANIC AND SHALL ALL BE SPECIFIED IN PLANT BEDS AND AROUND INDIVIDUAL TREES. WHEN APPLIED TO TREES, MULCH SHALL NOT BE PLACED ON TOP OF THE ROOT BALL OR BE PLACED AGAINST THE TRUNK. MULCH SHALL BE APPLIED A MINIMUM OF 12" TO 18" FROM THE TRUNK FOR ANY SIZED TREE. MATERIALS THAT DO NOT BIODEGRADE SUCH AS ROCK AND SHELL, ARE NOT DEEMED ACCEPTABLE. FAILURE TO INSTALL MULCH (AND TYPE OF MULCH) AS PROVIDED IN THE SPECIFICATION ABOVE MAY RESULT IN A FAILED INSPECTION. SEE HTTP://HORT.IFAS.UFL.EDU/WOODY/OVER-MULCHING.SHTML FOR MORE INFORMATION.

3) ALL AREAS TO RECEIVE 100% COVERAGE USING AN UNDERGROUND IRRIGATION SYSTEM WITH A RAIN SENSOR. IRRIGATION CONTRACTOR TO PROVIDE SHOP DRAWINGS TO LANDSCAPE ARCHITECT OF INSTALLED IRRIGATION SYSTEM.

4) I HEREBY CERTIFY THAT THESE LANDSCAPE, IRRIGATION, AND TREE MITIGATION SHEETS ARE DESIGNED IN COMPLIANCE WITH THE ORANGE COUNTY CODE(S) CHAPTER 15 AND CHAPTER 24. THE IRRIGATION HAS BEEN DESIGNED AND WILL BE INSTALLED PER CHAPTER 37, SECTIONS 601-613.

5) THE IRRIGATION SYSTEM TO BE INSTALLED WILL BE A TEMPORARY SYSTEM FOR THE PURPOSE OF ESTABLISHING PLANT MATERIAL.

6) ALL EXISTING INVASIVE EXOTIC PLANTS, AS LISTED ON THE FLORIDA EXOTIC PEST PLANT COUNCIL'S INVASIVE SPECIES LIST SHALL BE REMOVED. (ANY DISTURBANCE OF WETLAND AREAS REQUIRES COMPLIANCE WITH CH.15 OF THIS CODE AND REVIEW BY THE COUNTY'S ENVIRONMENTAL PROTECTION DIVISION.)

City of Ormond Beach
FINAL APPROVAL
Site Plan Review Committee

NOTE: Failure to notify Landscape Architect of plan, detail, or specification discrepancies prior to construction, makes contractor responsible for all costs incurred for construction charges, not the owner or his representative (Landscape Dynamics Construction Co. Inc.) The Owner must maintain the height of all plants within the "Line-Of-Site" triangle area to a height of no greater than 24" above grade for shrubs and groundcover, and tree branching no lower than 72" above finish grade, to ensure clear site line views toward traffic at road and driveway intersections. Landscape Dynamics Construction Co. Inc., is not responsible for continued maintenance of such plant material. The owner, leasing company and/or the landscape maintenance company accepts full responsibility for these maintenance requirements.LANDSCAPE CONTRACTOR TO HAND WATER ALL PLANT / TREE MATERIAL FOR AT LEAST 30 DAYS AFTER INSTALLATION.

48 HOURS BEFORE YOU DIG
CALL SUNSHINE
1-800-432-4770 or 811
IT'S THE LAW IN FLORIDA
FLORIDA LAW REQUIRES EXCAVATORS TO NOTIFY OWNERS OF UNDERGROUND FACILITIES NO LESS THAN TWO (2) DAYS PRIOR TO EXCAVATION

LANDSCAPE ARCHITECT:
Robert R. Buchanan LA0000932

Landscape Dynamics Construction Co. INC. hereby reserves its common law copyright and other property rights in these plans, ideas, and designs. These ideas, designs, and plans are not to be reproduced, changed, or copied in any form or manner whatsoever, nor are they to be assigned to any third party, without first obtaining the express written permission from Landscape Dynamics Construction Co. INC.

Phone: 407-579-1811 - Email: randy@landscapedynamics.com

Window World
1147 US Highway 1
Ormond Beach, Florida 32174

LANDSCAPE Dynamics CONSTRUCTION CO., INC.
LANDSCAPE ARCHITECTS AND PLANNERS
P.O. BOX 2852 - Winter Park, Florida 32790-2852

Landscape Details and Specs
Window World
Ormond Beach, Florida

REVISIONS 1 2 3 4 5 6 7 8 9

DATE: 03-17-15
JOB NUMBER: 15-006
DRAWN BY: BRB
FILE: Landscape
SCALE: N.T.S.

L-2

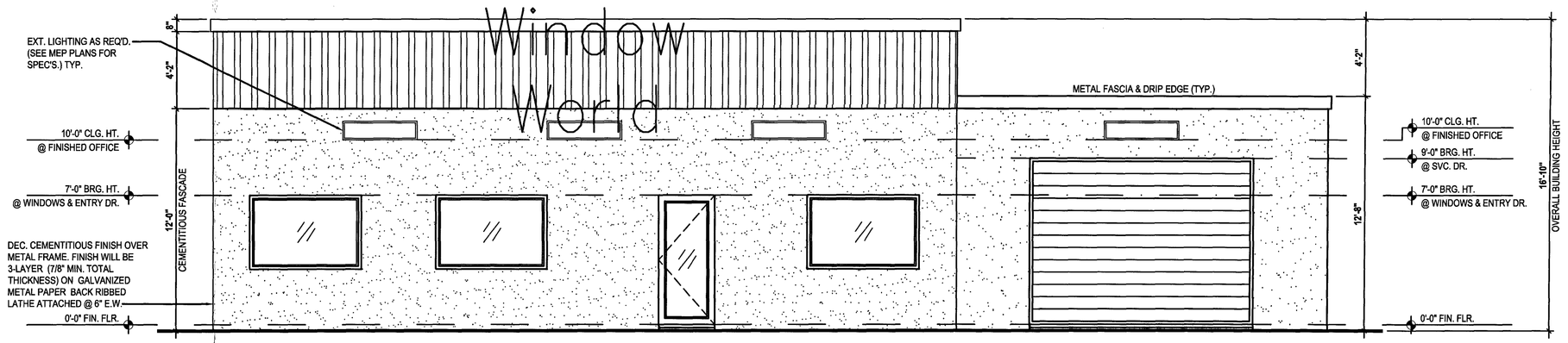

South Elevation

SCALE: 3/16" = 1'-0"

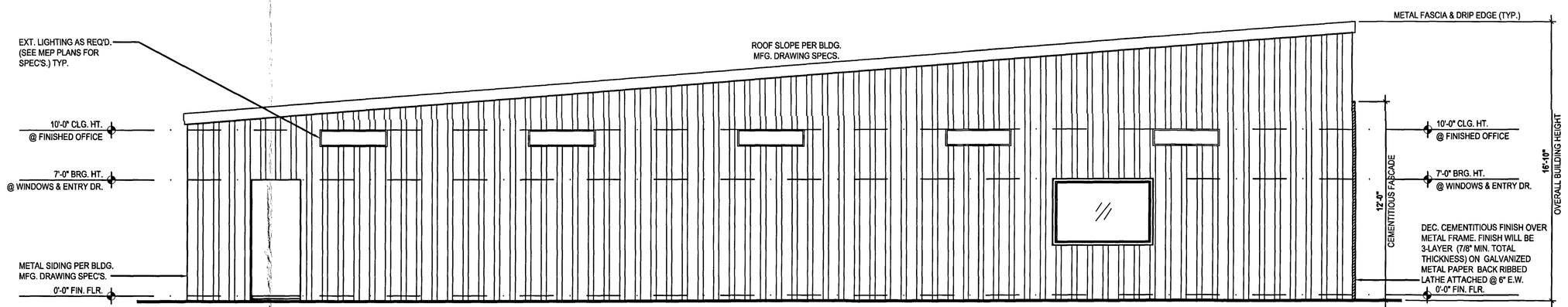

West Elevation

SCALE: 3/16" = 1'-0"

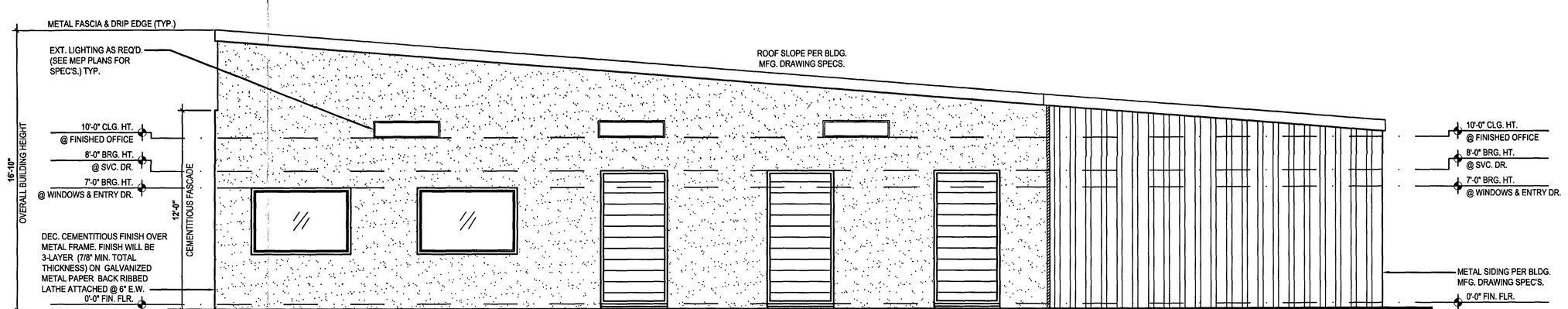

East Elevation

SCALE: 3/16" = 1'-0"

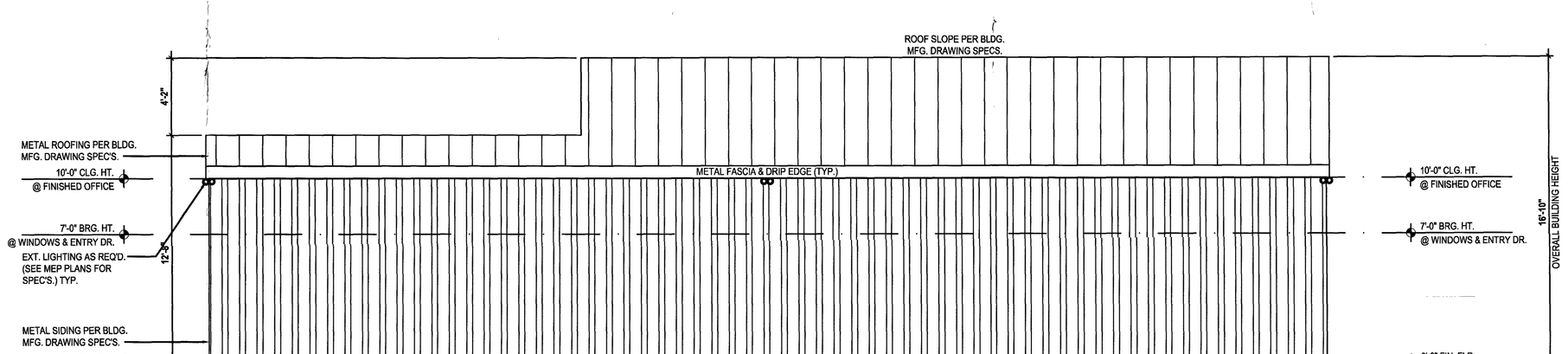

North Elevation

SCALE: 3/16" = 1'-0"

WRITTEN DIMENSIONS SHALL HAVE PRECEDENCE OVER SCALE DIMENSIONS. Contractors shall verify and be responsible for all dimensions and conditions of the job and AL Designs Inc. must be notified in writing of any changes in the dimensions, conditions and specifications appearing on these plans.

City of Ormond Beach
FINAL APPROVAL
Site Plan Review Committee

ENGINEERING KEY:

DESIGN REQUIREMENTS
A. ROOF LIVE LOAD IS 20 PSF
B. FLOORS LIVE LOAD IS 40 PSF, BALCONIES, DECKS, STAIRS, LIVE LOAD IS 60PSF

NOTE: THIS STRUCTURE HAS BEEN DESIGNED TO MEET OR EXCEED REQUIREMENTS OF THE 5TH EDITION (2014) FLORIDA BUILDING CODE

1. WIND EXPOSURE - CATEGORY (C)
2. ULTIMATE WIND SPEED - 140MPH NOMINAL WIND SPEED - 108MPH
3. INTERNAL PRESSURE COEFFICIENT - +/-.18
4. INTERNAL PRESSURE COEFFICIENT - .18
5. MAXIMUM PRESSURE FOR COMPONENTS AND CLADDING, 20 s.f.t /-38.4 s.s.f. UNLESS NOTED OTHERWISE
6. SINGLE FAMILY RESIDENCE TO BE RISK CATEGORY II.

FLORIDA BUILDING CODE (FBC) 2015 5TH EDITION

DESIGN CRITERIA:
- 2014 FLORIDA BUILDING CODE (FBC-B) 5TH EDITION
- 2014 FLORIDA PLUMBING CODE
- 2014 FLORIDA MECHANICAL CODE
- 2014 FLORIDA FIRE PREVENTION CODE
- 2014 NATIONAL ELECTRICAL CODE (NEC)
- 2014 FLORIDA ACCESSIBILITY CODE (CHAPTER 11, FBC)
- 2014 NFPA 101 - LIFE SAFETY CODE w/ FLORIDA
- 2008 NFPA 1 - UNIFORM FIRE CODES w/ FLORIDA AMENDMENTS

- OCCUPANCY USE: BUSINESS GROUP B
- OCCUPANCY LOAD: 1/100 + 17 PEOPLE
- CONSTRUCTION TYPE: IB
- BASIC WIND SPEED: 120 MPH (MIS)
- NUMBER OF STORIES: SINGLE STORY
- BUILDING HEIGHT: 30'-0" OVERALL BUILDING HEIGHT
- FIRE SPRINKLER SYSTEM: YES

DESIGN DATA

FBC CRITERIA:
- OCCUPANCY TYPE: BUSINESS GROUP B (1000GROSS S.F./PERSON)

OCCUPANT LOAD CALCS:
- OFFICE: 906 S.F./1000.F. PER PERSON = 9 PERSONS
- RESTROOM: 0 PERSONS
- STERILE ROOM: 2,294 S.F./1000.F. PER PERSON = 69 PERSONS
- TOTAL OCCUPANTS: 78 PERSONS
- REQUIRED EXITS: (1 LEVEL @ 999SF 1 EXIT (REQ'D) 2 EXITS PROV.

MAX TRAVEL DISTANCE ALLOWED: 200 FT.
- ACTUAL TRAVEL: (MAX): 42'-4"
- NO FIRE SPRINKLER SYSTEM
- NO DEAD END CORRIDOR
- CONSTRUCTION TYPE: IB

THESE PLANS ARE NOT VALID FOR PERMITTING WITHOUT THE RAISED SEAL & SIGNATURE OF ENGINEER/ARCHITECT OF RECORD.

WRITTEN DIMENSIONS SHALL HAVE PRECEDENCE OVER SCALE DIMENSIONS. Contractors shall verify and be responsible for dimensions and conditions of the job.

FIELD NOTES:

THE SCOPE OF WORK DETAILED IN THESE PRINTS INDICATES INT. BUILDOUT OF A NEWLY BUILT METAL BUILDING WITH OFFICE/WAREHOUSE SPACE. ANY ADDITIONAL WORK DONE MUST BE VERIFIED BY THE BUILDER/TENNANT PRIOR TO COMMENCMENT.

1. ALL DIMENSIONS TO BE FIELD VERIFIED PRIOR TO STARTING WORK. ANY CHANGES IN DIMENSIONS TO BE VERIFIED BY BUILDER/TENNANT.
2. ALL BUILDING STRUCTURE PER METAL BUILDING MFG. SPECIFICATIONS.
3. THE WORK DESCRIBED IN THESE PLANS INDICATES A LEVEL 2 CONSTRUCTION PER FLORIDA BUILDING CODE 2014 EDITION.
4. ALL WORK MUST COMPLY WITH REQUIREMENTS DETAILED WITHIN THIS SECTION.

GENERAL NOTES:

1. WORK SHALL CONFORM WITH ALL FEDERAL, STATE AND MUNICIPAL CODES HAVING JURISDICTION OVER THIS PROJECT.
2. CONTRACTOR SHALL VISIT THE SITE PRIOR TO CONTRACT TO VERIFY EXISTING FIELD CONDITIONS. ALL EXISTING DIMENSIONS SHALL BE VERIFIED AND/OR GEIBERAL CONTRACTOR SHALL BE SHALL BE RESPONSIBLE FOR SAME.
3. ANY VARIATIONS OF THE DRAWING TO BE APPROVED BY AL DESIGNS.
4. GENERAL CONTRACTOR TO RECIEVE, UNLOAD, AND INSTALL ALL FINISH MATERIALS AND ALL OTHER ITEMS DELIVERED TO LOCATION.
5. GENERAL CONTRACTOR TO PROVIDE A MIN. OF TWO FIRE EXTINGUISHERS IN COMPLIANCE WITH THE LOCAL FIRE MARSHAL. LOCATION & QUANTITY OF FIRE EXTINGUISHER(S) TO BE DETERMINED BY THE FIRE MARSHAL.
6. ALL INT. WALLS TO BE BUILT w/ LIGHT GUAGE METAL FRAMING AT MAX. SPACING OF 16" O.C. w/ 5/8" GYPSUM WALL OR CEILING BOARD.

12/14/15

All designs/plans in this publication are protected under the copyright law. Reproduction of the illustrations or working drawings by any means is strictly prohibited unless licensed by AL Designs, Inc.

AL Designs
41411 Aspen St.
Eustis, FL 32736
(407) 756-0839
aldesigns@icloud.com

Window World Showroom
1142 US. Hwy 1
Ormond Beach, FL

ISSUE DATE	11/28/2015
REVISIONS	
PROJECT:	15-1142
SCALE:	AS NOTED
DRAWN BY:	ALM & JML
DESIGNED BY:	ALM

ELEVATIONS

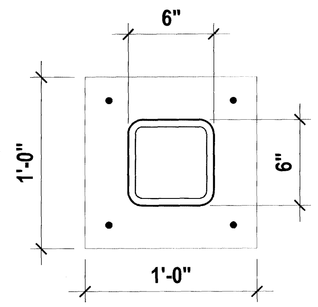

6"x6"x1/2" COATED STEEL POST w/ 12"x12"x5/16" PLATE WELDED TOP & BOTTOM FOR MOUNTING TO SIGN BOX AT TOP AND FTR. AT BOTTOM

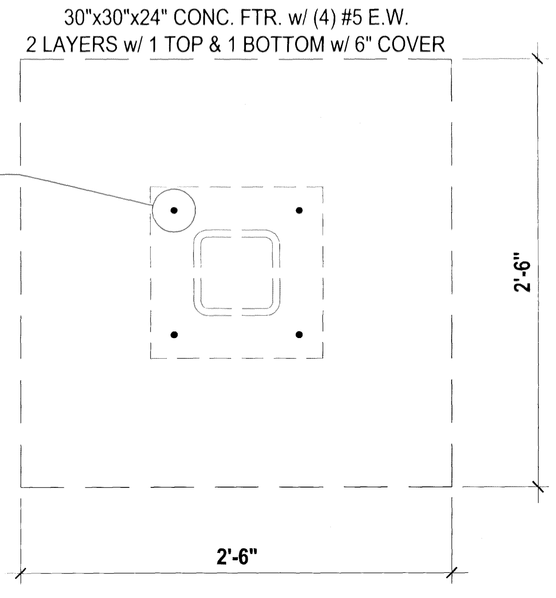

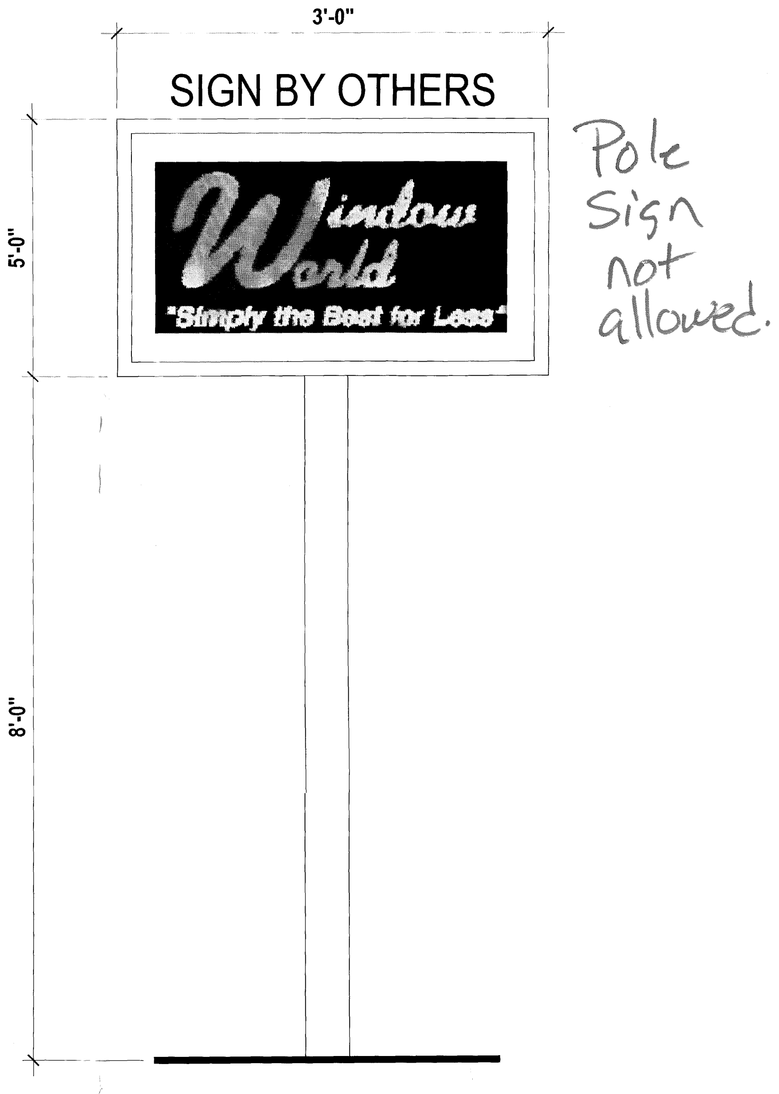

Pole Sign not allowed.

City of Ormond Beach
FINAL APPROVAL
Site Plan Review Committee

Steve Krone 12/14/15

ENGINEERING KEY:

DESIGN REQUIREMENTS
A. ROOF LIVE LOAD IS 20 PSF
B. FLOORS LIVE LOAD IS 40 PSF, BALCONIES, DECKS, STAIRS, LIVE LOAD IS 60PSF

NOTE: THIS STRUCTURE HAS BEEN DESIGNED TO MEET OR EXCEED REQUIREMENTS OF THE 5TH EDITION (2014)

FLORIDA BUILDING CODE

1. WIND EXPOSURE - CATEGORY (C)
2. ULTIMATE WIND SPEED - 140MPH. NOMINAL WIND SPEED - 108MPH.
3. WIND IMPORTANCE FACTOR - 1.0
4. INTERNAL PRESSURE COEFFICIENT- .18
5. MAXIMUM PRESSURE FOR COMPONENTS AND CLADDING, 29.4 p.s.f./-39.4 p.s.f. UNLESS NOTED OTHERWISE.
6. SINGLE FAMILY RESIDENCE TO BE RISK CATEGORY II.

FLORIDA BUILDING CODE (FBC) 2015 5TH EDITION

DESIGN CRITERIA:

- 2014 FLORIDA BUILDING CODE (FBC-B) 5TH EDITION
- 2014 FLORIDA PLUMBING CODE
- 2014 FLORIDA MECHANICAL CODE
- 2014 FLORIDA FIRE PREVENTION CODE
- 2014 NATIONAL ELECTRICAL CODE (NEC)
- 2014 FLORIDA ACCESSIBILITY CODE (CHAPTER 11, FBC)
- 2014 NFPA 101 - LIFE SAFETY CODE w/ FLORIDA
- 2006 NFPA 1 - UNIFORM FIRE CODES w/ FLORIDA AMENDMENTS

- OCCUPANCY USE: BUSINESS GROUP B
- OCCUPANCY LOAD: 1/100 = 17 PEOPLE
- CONSTRUCTION TYPE: IB
- BASIC WIND SPEED: 120 MPH (M/S)
- NUMBER OF STORIES: SINGLE STORY
- BUILDING HEIGHT: 30'-0" OVERALL BUILDING HEIGHT
- FIRE SPRINKLER SYSTEM: YES

DESIGN DATA

FBC CRITERIA:

- OCCUPANCY TYPE: BUSINESS GROUP B (100GROSS S.F./PERSON)
- OCCUPANT LOAD CALCS:
- OFFICE: 906 S.F./100S.F. PER PERSON = 9 PERSONS
- RESTROOM 0 PERSONS
- STERILE ROOM 2,294 S.F./100S.F. PER PERSON = 69 PERSONS
- TOTAL OCCUPANTS 78 PERSONS
- REQUIRED EXITS: (1 LEVEL @ 995SF 1 EXIT (REQ'D) 2 EXITS PROV.
- MAX TRAVEL DISTANCE ALLOWED: 200 FT.
- ACTUAL TRAVEL: (MAX): 42'-4"
- NO FIRE SPRINKLER SYSTEM
- NO DEAD END CORRIDOR
- CONSTRUCTION TYPE: IIB

All designs/plans in this publication are protected under the copyright law. Reproduction of the illustrations or working drawings by any means is strictly prohibited unless licenced by AL Designs Inc.

HAVE PRECEDENCE OVER SCALE DIMENSIONS. Contractors shall verify and be responsible for all dimensions and conditions of the job and AL Designs Inc. must be notified in writing of any changes in the dimensions, conditions and specifications appearing on these plans.

AL Designs
41411 Aspen St.
Eustis, FL 32736
(407) 756-0830
aldesigns@icloud.com

DON BOLDEN ENG., Inc.
Don Bolden, P.E.
Florida Registration #47524
Certificate of Authorization #26030
P.O. Box 530783
DeBary, FL 32753

Window World Showroom
1142 US. Hwy 1
Ormond Beach, Fl.

Jason E:\Backup 10-17-15\Window World\S-03 Exterior Sign.dwg
Nov 14, 2015,12:37pm

ISSUE DATE	11/14/2015
REVISIONS	
PROJECT:	15-1142
SCALE:	AS NOTED
DRAWN BY:	ALM & JML
DESIGNED BY:	ALM

Ext. Sign
SCALE: 1" = 1'-0"

EXTERIOR SIGN
S-03